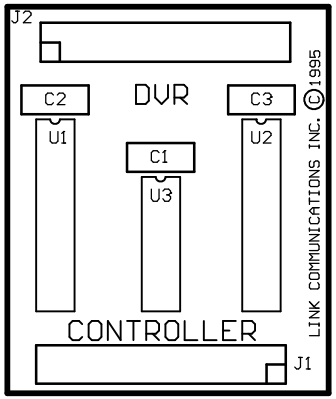
J2
DVR
C2
C3
U1
U2
C1
U3
CONTROLLER
J1
LINK COMMUNICATIONS INC. ©1995

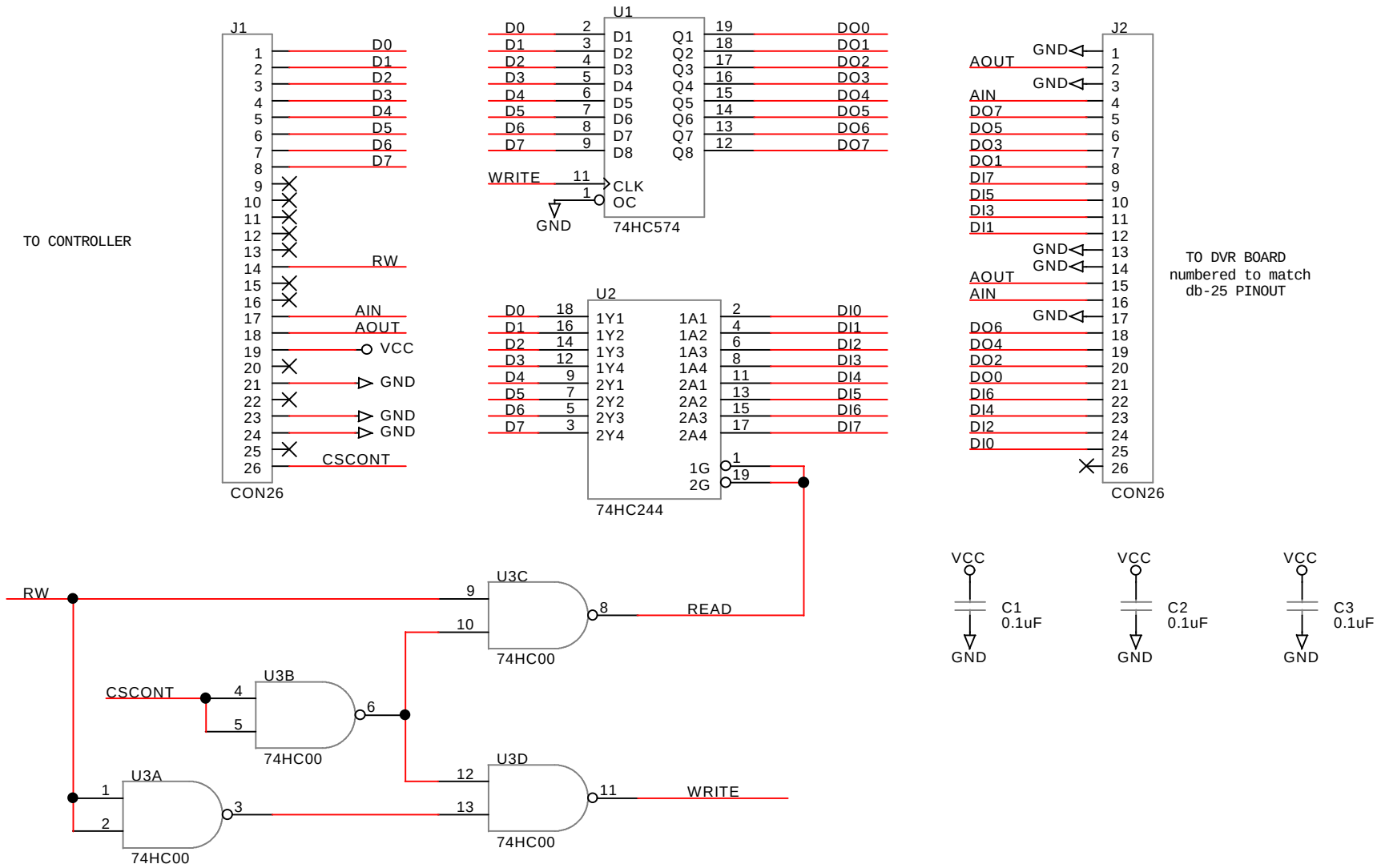

DVR STATIC CONTROLLER INTERFACE

Link Communications Inc.		
Size A	Document Number DVR CONTROLLER INTERFACE BOARD	Rev A
Date: Thursday, May 30, 1996	Sheet 1 of 1	