RLC-1 Software Version 2.00

Copyright 1998, Link Communications, Inc.

Link Communications Inc.
1407 4th Ave N
Billings, MT 59101-1518

http://www.link-comm.com

Table of Contents

Return Policy 1-15

Chapter 1: Getting Started 1-16

Introduction: 1-17

Limited Warranty 1-18

User Survey (Optional) 1-19

Re-Initialization the Controller 1-20

Resetting the Controller 1-20

Troubleshooting the Controller 1-21

*** Getting On The Air Quickly *** 1-22

Setup and Interfacing 1-23

Serial Port Interfacing 1-27

System Wide Errors 1-29

Chapter 2: Port Connection Commands 2-1

000: Connect one Port to another Port 2-2

001: Monitor one Port from another Port 2-3

002: Disconnect one Port from another Port 2-4

009: Checking Cross-Point Connections 2-5

010: Time-Out Timer Enabled/Disabled 2-6

011: Check Time-Out Timer Status 2-7

012: Program a Receiver's Access Mode 2-8

013: Checking Access Modes 2-9

014: Port Supervisory PTT Control 2-10

015: Check Port Supervisory Control Settings 2-11

018: Receiver Active - Inactive Control Command Execution 2-12

019: Check Receiver Active - Inactive Command Execution 2-13

024: Controls a Port's COR/PL Polarity 2-14

025: Interrogates a Port's COR/PL Polarity 2-15

Chapter 2 Examples 2-16

Example 2-1: Configuring a Port as a Repeater, Link 2-17

Example 2-2: Enable Time-Out Timers 2-18

Example 2-3: Configuring a Ports COR/PL Polarity 2-19

Chapter 3: System Audio Control 3-1

003: User Control if Errors are Spoken 3-2

007: Set Up the System's Audio Routing Variables 3-3

008: Recall the System's Audio Routing Variables 3-5

039: Change the Internal Audio Routing Variable 3-6

020: Port DTMF Mute Control 3-7

021: Check Port Mute Controls 3-8

022: Set-up DTMF Cover Tone Variables 3-9

Chapter 3 Examples 3-10

Example 3-1: RLC-1 Audio Routing Variables 3-11

Example 3-2: I want to enable DTMF muting on port 1,2 3-13

Example 3-3: I want to disable DTMF cover tone on muted ports 3-13

Example 3-4: When some people talk, the DTMF cover tone covers them up for a short period of time. 3-14

Chapter 4: System Security 4-1

004: Setting Up the Master System Unlock Codes 4-2

005: Unlocking the Controller with Challenged Passwords 4-4
026: Unlocking the Controller with Fixed Passwords 4-5

006: Locking the Controller 4-6

027: Rename DTMF Command Name 4-7

028: Command Read Back by Command Number 4-8

029: Command Name Compare to Find Command Number 4-9

030: Change First,Second,Third Command Name Digits 4-10

031: Group Assign DTMF Command Mask Assign 4-11

032: Command Checks Value of DTMF Execution Register 4-12

033: Group Assign Master Unlock Requirement for DTMF 4-13

034: Individually Assign Unlock Requirement for DTMF 4-14

035: Recall DTMF Unlock Requirements on a Command 4-15

036: Group Assign Master Unlock Requirement for Serial 4-16

037: Individually Assign Unlock Requirement for Serial 4-17

038: Recall Serial Unlock Requirements on a Command 4-18

040: User Forced Execution Digit Change 4-19

041: Check the Forced Execution Digit 4-20

115: Assign the DTMF Decoder Priority 4-21

Chapter 4 Examples 4-22

Example 4-1: Accessing Locked Commands when in Challenged Password Mode 4-23

Example 4-2: Renaming Commonly Used Commands 4-24

Example 4-3: Renaming Commands 4-25

Example 4-4: Assigning DTMF, Un-Lock codes, Serial masks 4-26

Example 4-5: Changing the <Forced Execution> Digit 4-28

Chapter 5: Messages, Tones and Responses 5-1

042: Generate a Tone Sequence Out Selected Ports 5-2

043: Generate a CW Message Out Selected Ports 5-4

044: Generate a DTMF Sequence Out a Selected Port 5-5

045: Generate a Voice Message 5-7

046: Delete a Message Slot 5-8

047: DTMF Keypad Message Generate 5-9

048: Recall a Message Slot 00..33 5-10

049: Program a Message Slot 5-11

111: Set Up the CW Speed 5-12

112: Set Up the CW Tone Frequency 5-13

113: Program a 2-Tone Pager Slot 5-14

114: Recall the 2-Tone Paging Slot 01..20 5-17

118: Program a Voice Message Delay for the Link Ports 5-18

Chapter 5 Examples 5-19

Example 5-1: Generating a Custom Courtesy Beep 5-20

Example 5-2: Building Port 1's ID's 5-21

Chapter 6 System Timers 6-1

050: Recall a Timer Slot 6-2

051: Start a Timer Slot 6-4

052: Program a Timer Slot 6-5

066: Start a User Timer 6-6

067: Stop a User Timer 6-7

023: Control DTMF Timed Execution 6-8

Examples for Chapter 6 6-9

Example 6-1: Using a User timer to Auto-Disconnect a Port 6-10

Example 6-2: How to correctly set-up your ID timers 6-12

Chapter 7 Scheduler, Time-of Day Clock 7-1

053: Speak Good Morning, Afternoon, or Evening 7-2

054: Recall Time-of-Day Clock (Male)
124: Recall Time-of-Day Clock in 24 Hour Mode (Male) 7-3

055: Recall Time-of-Day Clock (Female) 7-4

056: Recall Date (Male) 7-5

057: Recall the Day (Male) 7-6

058: Setting the Time 7-7

059: Setting the Date, Y2K Compliant 7-8

060: Scheduler Event Recall 7-9

061: Scheduler Event Program 7-10

062: Scheduler Event Enable/Disable 7-13

Examples for Chapter 7 7-14

Example 7-1: Set-up the Scheduler to reset my Analog High/Low Readings at 12:00AM 7-15

Example 7-2: Set-up the Scheduler to Enable Time readings on the hour beginning at 8:00 AM until 6:00 PM 7-16

Chapter 8: Event Tables 8-1

063: Recall an Event 8-2

064: Program an Event 8-3

065: Enable/Disable an Event 8-9

Examples for Chapter 8 8-10
Example 8-1: How to have a Voice ID revert to a CW ID 8-11

Chapter 9: Analog Input System 9-1

070: Analog Line Faceplate Assignment 9-2

071: Recall Analog Faceplate 9-5

072: Analog Line Calibration 9-6

073: Recall Analog Line Calibration 9-7

074: Reset Analog 1-4 High/Low Values 9-8

075: Read an Analog Line 9-9

076: Read an Analog High Value 9-10

077: Read an Analog Low Value 9-11

078: Read an Analog High Line Time 9-12

079: Read an Analog Low Line Time 9-13

080: Read an Analog High Date 9-14

081: Read an Analog Low Date 9-15

082: Analog Line Alarm Value Program 9-16

083: Check Analog Alarm Points 9-19

084: Check Analog Active Alarms 9-20

Examples for Chapter 9 9-21

Example 9-1: Configure a High Temperature Alarm 9-22

Temperature Sensor Hook-Up 9-23

Reading AC Voltage with an Analog Input Line 9-24

Reading Wind Speed with Analog Input 4 9-25

Chapter 10: Input and Output Lines 10-1

085: Read Input Lines 10-2

086: Output Line 1 On 10-3

087: Output Line 1 Off 10-3

088: Output Line 2 On 10-3

089: Output Line 2 Off 10-3

090: Output Line 3 On 10-3

091: Output Line 3 Off 10-3

092: Output Line #..# On 10-4

093: Output Line #..# Off 10-5

094: Check Output Lines 10-6

Examples for Chapter 10 10-7

Example 10-1: Configure a Door Alarm 10-8

Magnetic Door Switch Drawing 10-9

Output Line Relay Driver Drawing 10-10

Logical Input Lines 10-11

Input line reading AC power fail Drawing 10-11

Chapter 11: Doug Hall RBI-1, RLC-ICM and Misc.Remotes 11-1

A Brief Description on how to use: Remote Base Functions 11-2

095: Enter Frequency Plus Offset for RBI-1, RLC-ICM 11-3

096: Set PL Frequency, Encode On-Off, Decode On-Off 11-4

097: Recall Memory Channels on RBI-1 11-7

098: Set Power on the RBI-1 11-8

099: Turn RBI-1 Radio Band Power On-Off 11-9

100: Reset External Interface 11-10

101: Configure the RLC-ICM Module 11-11

102: Recall Frequency 11-13

103: Recall All Remote Variables 11-14

104: External Serial Data Send - Parallel BCD Controller 11-15

110: Pulse Output Line 'X' 'Y' Times 11-16

Chapter 11 Examples 11-17

Building a cable to interface the RLC-ICM/RBI-1 Interfaces 11-20

Chapter 12: HF Remote Base Radio 12-1

105: HF Mode Configure 12-2

106: HF Mode Enable 12-3

HF Remote Base Keypad 12-4

107: HF Mode Disable 12-6

108:Enter HF Radio Address and Radio Type 12-7

109: Command Line Control of the HF Routines 12-9

Chapter 12 Examples 12-10

Example 12-1: I need a macro to set-up the HF remote up 12-11

HF Radio Interfacing 12-12

Chapter 13: Pre-Access Code Set-up 13-1

120: Assign the 3 Ports Link Prefixes 13-2

121: Configure Pre-Access on a Port 13-3

122: Enable/Disable Pre-Access on a Port 13-4

123: Pre-Access Configure for the Stop Access Mode 13-5

Chapter 13 Examples 13-6

Example 13-1: Configuring ports for Pre-access 13-7

Example 13-2: Pre-Access Events, Configurations and Uses 13-8

Chapter 14: Macros 14-1

126: Serial Recall a range of Macros 14-2

127: Erase a Macro Position 14-3

128: Enable/Disable a Macro Position 14-4

129: Recall a Macro Position 14-5

130: Program/Append a Macro Position 14-6

131: Cancel all Responses Following This Command 14-7

132: Re-enables all Responses Following This Command 14-7

141..210: Execute Macro #01..#70 14-8

Chapter 16 Examples 14-10

Chapter 15: Serial Commands 15-1

211: Serial Upload Data File 15-2

212: Serial Download Data File 15-3

213: Serial Command Name List 15-4

214: Change the Serial Baud Rate or Send Serial Data 15-5

Chapter 15 Examples 15-6

Example 15-1: Setting up the Serial Port 15-7

Example 15-2: I want to download the RAM into a file 15-8

Chapter 16: Misc. Commands 16-1

116: Select a Tone Volume Control Level 16-2

117: Recall the Tone Level Settings 16-4

215: Remotely Reset the Controller 16-5

Chapter 17: Appendix and Board Modules 17-1

Appendix A: ASCII Data Table 17-2

Appendix B: Voice Word Look-up Table 17-3

Special Voice Words 17-9

Appendix C: Hardware 17-10

Board Layout 17-11

Schematic Diagrams 17-14

Bill of Materials 17-19

Index of Command Names

000: Connect one Port to another Port 2-2
001: Monitor one Port from another Port 2-3
002: Disconnect one Port from another Port 2-4
003: User Control if Errors are Spoken 3-2
004: Setting Up the Master System Unlock Codes 4-2
005: Unlocking the Controller with Challenged Passwords 4-4
006: Locking the Controller 4-6
007: Set Up the System's Audio Routing Variables 3-3
008: Recall the System's Audio Routing Variables 3-5
009: Checking Cross-Point Connections 2-5
010: Time-Out Timer Enabled/Disabled 2-6
011: Check Time-Out Timer Status 2-7
012: Program a Receiver's Access Mode 2-8
013: Checking Access Modes 2-9
014: Port Supervisory PTT Control 2-10
015: Check Port Supervisory Control Settings 2-11
018: Receiver Active - Inactive Control Command Execution 2-12
019: Check Receiver Active - Inactive Command Execution 2-13
020: Port DTMF Mute Control 3-7
021: Check Port Mute Controls 3-8
022: Set-up DTMF Cover Tone Variables 3-9
023: Control DTMF Timed Execution 6-8
024: Controls a Port's COR/PL Polarity 2-14
025: Interrogates a Port's COR/PL Polarity 2-15
026: Unlocking the Controller with Fixed Passwords 4-5
027: Rename DTMF Command Name 4-7
028: Command Read Back by Command Number 4-8
029: Command Name Compare to Find Command Number 4-9
030: Change First,Second,Third Command Name Digits 4-10
031: Group Assign DTMF Command Mask Assign 4-11
032: Command Checks Value of DTMF Execution Register 4-12
033: Group Assign Master Unlock Requirement for DTMF 4-13
034: Individually Assign Unlock Requirement for DTMF 4-14
035: Recall DTMF Unlock Requirements on a Command 4-15
036: Group Assign Master Unlock Requirement for Serial 4-16
037: Individually Assign Unlock Requirement for Serial 4-17
038: Recall Serial Unlock Requirements on a Command 4-18
039: Change the Internal Audio Routing Variable 3-6
040: User Forced Execution Digit Change 4-19
041: Check the Forced Execution Digit 4-20
042: Generate a Tone Sequence Out Selected Ports 5-2
043: Generate a CW Message Out Selected Ports 5-4
044: Generate a DTMF Sequence Out a Selected Port 5-5
045: Generate a Voice Message 5-7

046: Delete a Message Slot 5-8
047: DTMF Keypad Message Generate 5-9
048: Recall a Message Slot 00..33 5-10
049: Program a Message Slot 5-11
050: Recall a Timer Slot 6-2
051: Start a Timer Slot 6-4
052: Program a Timer Slot 6-5
053: Speak Good Morning, Afternoon, or Evening 7-2
054: Recall Time-of-Day Clock (Male) 7-3
055: Recall Time-of-Day Clock (Female) 7-4
056: Recall Date (Male) 7-5
057: Recall the Day (Male) 7-6
058: Setting the Time 7-7
059: Setting the Date 7-8
060: Scheduler Event Recall 7-9
061: Scheduler Event Program 7-10
062: Scheduler Event Enable/Disable 7-13
063: Recall an Event 8-2
064: Program an Event 8-3
065: Enable/Disable an Event 8-9
066: Start a User Timer 6-6
067: Stop a User Timer 6-7
070: Analog Line Faceplate Assignment 9-2
071: Recall Analog Faceplate 9-5
072: Analog Line Calibration 9-6
073: Recall Analog Line Calibration 9-7
074: Reset Analog 1-4 High/Low Values 9-8
075: Read an Analog Line 9-9
076: Read an Analog High Value 9-10
077: Read an Analog Low Value 9-11
078: Read an Analog High Line Time 9-12
079: Read an Analog Low Line Time 9-13
080: Read an Analog High Date 9-14
081: Read an Analog Low Date 9-15
082: Analog Line Alarm Value Program 9-16
083: Check Analog Alarm Points 9-19
084: Check Analog Active Alarms 9-20
085: Read Input Lines 10-2
086: Output Line 1 On 10-3
087: Output Line 1 Off 10-3
088: Output Line 2 On 10-3
089: Output Line 2 Off 10-3
090: Output Line 3 On 10-3
091: Output Line 3 Off 10-3
092: Output Line #..# On 10-4
093: Output Line #..# Off 10-5
094: Check Output Lines 10-6

095: Enter Frequency Plus Offset for RBI-1, RLC-ICM 11-3
096: Set PL Frequency, Encode On-Off, Decode On-Off 11-4
097: Recall Memory Channels on RBI-1 11-7
098: Set Power on the RBI-1 11-8
099: Turn RBI-1 Radio Band Power On-Off 11-9
100: Reset External Interface 11-10
101: Configure the RLC-ICM Module 11-11
102: Recall Frequency 11-13
103: Recall All Remote Variables 11-14
104: External Serial Data Send - Parallel BCD Controller 11-15
105: HF Mode Configure 12-2
106: HF Mode Enable 12-3
107: HF Mode Disable 12-6
108:Enter Icom's HF Radio Address or Kenwood's radio type 12-7
109: Command Line Control of the HF Routines 12-9
110: Pulse Output Line 'X' 'Y' Times 11-16
111: Set Up the CW Speed 5-12
112: Set Up the CW Tone Frequency 5-13
113: Program a 2-Tone Pager Slot 5-14
114: Recall the 2-Tone Paging Slot 01..20 . . . . . 5-17, 5-18
115: Assign the DTMF Decoder Priority 4-21
116: Select a Tone Volume Control Level 16-2
117: Recall the Tone Level Settings 16-4
120: Assign the 3 Ports Link Prefixes 13-2
121: Configure Pre-Access on a Port 13-3
122: Enable/Disable Pre-Access on a Port 13-4
123: Pre-Access Configure for the Stop Access Mode 13-5
126: Serial Recall a range of Macros 14-2
127: Erase a Macro Position 14-3
128: Enable/Disable a Macro Position 14-4
129: Recall a Macro Position 14-5
130: Program/Append a Macro Position 14-6
131: Cancel all Responses Following This Command 14-7
132: Re-enables all Responses Following This Command 14-7
141..210: Execute Macro #01..#70 14-8
211: Serial Upload Data File 15-2
212: Serial Download Data File 15-3
213: Serial Command Name List 15-4
214: Change the Serial Baud Rate or Send Serial Data 15-5
215: Remotely Reset the Controller 16-5

Link Communications, Inc.

Repeater, Linking and Monitor Control Systems

Return Policy

These policies supersede policies appearing on all other Link Communications, Inc. literature and are in e after March 1, 1989.

- **Please keep all packing material and documentation in the event that your equipment has to be serviced or returned.**

- Before returning any product, you must obtain a Return Authorization (RMA) number. You can obt (406) 245-5002.

- **No returns, of any type, will be accepted without an RMA number. Please have the following information on hand when calling for an RMA number:** customer name, invoice number, serial number, and the nature of the problem. All can be found on your invoice.

- All product to be returned must **be returned within 30 days** from the invoice date, 100% complete, include manuals, parts bags, and other accessories provided by the manufacturer.

- All defective products will be accepted directly by Link Communications, Inc. for credit, exchange, r at Link Communications, Inc.'s discretion. **After 30 days from invoice date, the manufacturer's warranty applies.**

- All non-defective returns for credit, exchange, or refund are subject to a restocking fee on the sche returns will be accepted beyond the 30 day period. Shipping costs are not refundable.

    - 0 to 10 days 5% restocking
    - 11 to 20 days 10% restocking
    - 21 to 30 days 15% restocking

- **Link Communications, Inc. reserves the right to authorize product returns beyond 30 days from date of invoice. If the product is accepted after 30 days, credit will be issued toward FUTURE PURCHASE ONLY.**

If you have any questions — JUST ASK.
All of us have tried to make sure that this order has been shipped correctly. If we have made an error - we want to make it right. order, just write or call, and our staff will personally handle your situation.

Link Communications, Inc. is a Montana Corporation FEIN 81-0490597

Chapter 1: Getting Started

This chapter deals with the information needed in getting the controller rolling and on the air. Read the sections carefully and familiarize yourself with the operations of the controller. Read through the sections on setting up events to allow ID's and enable messages.

Technical Support:

Link Communications, Inc. provides technical support to all users of Links products. We can try to answer your questions to our best ability. There may be some questions that we can not answer while on the telephone. We will do our best to locate a satisfactory response to your question. We can not, however, answer every question. Questions on equipment other than Link Communications, Inc. equipment will be handled on an individual basis. To help us in answering your questions do some preparations before calling us.

- Have the model number of your controller (RLC-1,2,3,4,5,Club)
- Have your controllers serial number. This is very important
- Have the software version before you call. This is available using Command 048, slot 00
- Read your manual
- Write down your questions before hand and have the programming **that you have tried** with each question
- Have any errors you received noted
- Before you call check the errors you received with the errors in the manual and verify the data you entered to try to determine how you received that error
- **Technical support is only handled at the following number (406) 245-5002**
- No technical support will be provided on the '800 sales number.

Remember that we receive hundreds of technical support calls every week. Please keep your calls short and to the point so we can provide all Link Communications, Inc. easy technical support.

You can also fax us your questions at: +(406) 245-4889
Email access: support@link-comm.com

World wide web access to latest software releases and manuals:
http://www.link-comm.com

Introduction:

Congratulations, you have purchased a very powerful tool for your group's repeater. The RLC-1 may seem complicated and intimidating at first, but don't worry. Setting it up and programming it are easy and straightforward, once you have read the manual. Please take the time to read it before you try to start programming. This will save you a lot of confusion and frustration, as it should answer most of your questions.

The RLC-1 repeater controller consists of one repeater port, two linking ports, four analog voltage inputs, four logical (dry contact) inputs, and eight MOSFET output drivers. The repeater port and each of the linking ports can be configured to require one of several combinations of COR and PL inputs for access. The RLC-1 has a single DTMF decoder that scans between the three receiver ports, thereby supporting DTMF control from all ports of the controller. Synthesized voice prompts the users in the programming of the controller's variables, provides voice ID's and alarms based on the inputs, etc.

This manual consists of three main sections: setup and interfacing, programming and commands, and the appendices with commonly referenced tables and charts. A glossary has also been included at the end to explain some of the terms and abbreviations that are used throughout the manual.

We have attempted to explain everything in a way that is easy to understand, but some questions are inevitable. If you have carefully read the manual and still have questions, please contact us.

Link Communications, Inc
1407 4th Ave N
Billings, MT 59101

(406) 245-5002
(406) 245-4889 fax

info@link-comm.com

Limited Warranty

Coverage:

Link Communications warrants that its products will be free from defects in materials and workmanship for a period of one year from the date of shipment. During this time, Link Communications will cover parts, labor and return shipping. If failure is caused by instances other than manufacturing defects, Link Communications will repair the product and bill the customer for parts and labor. Contact Link Communications for more information.

What Link Communications will not cover:

1. Too much voltage to the controller. The RLC-1 operates at +11V to +15V, negative ground.

2. Damage to the controller by lightning, accident, or incorrect power hook-up.

3. Incorrect unit installation.

4. Damage caused by shipment (damage claims are handled by the carrier).

6. Repairs by other than Link Communications Inc.

THIS WARRANTY HOLDS ONLY TO THE ORIGINAL PURCHASER

How to get service
Please contact Link Communications for servicing information and authorization.

Software
Link Communications holds the copyright on the RLC-1's software and hardware. Changes to the software, copying of the software, and use of the voice code is prohibited without the written consent of Link Communications.

Software updates
Link Communications will provide FREE Software updates for 6 months from the date of purchase. The owner must return replaced software chips to Link Communications in order to obtain further software updates. Software updates will cost $25.00 after the update warranty expires. Manual inserts and shipping are additional.

User Survey (Optional)

A knowledge of the user base will allow us to better serve you in the future by helping us develop more specialized software and hardware. Please take a few minutes and fill out this questionnaire.

RLC-1 Serial Number ..... _____
RLC-1 Purchase Date ..... _____

Application: (Circle All That Apply)

Ownership:

- 1 - Privately Owned Repeater
- 2 - Club Owned Repeater
- 3 - Group Owned Repeater
- 4 - Commercial Business Repeater
- 5 - Other _____

Installation:

- 1 - Wide Coverage Repeater with Chain Links
  - Port to Port Linking
- 2 - Full Duplex Links
- 3 - Half Duplex Links
- 4 - VHF Repeater: Power _____ Make _____
- 5 - UHF Repeater: Power _____ Make _____
- 6 - Link Ports Used as Repeater Ports: Yes No
- 7 - Serial Data Used to Control Repeater: Yes No
- 8 - Other Amateur Repeaters At the Site: Yes No
- 9 - Other Link Communication Products Used: Yes No

Misc:

- 1 - User Base: Technical Rag Chew Personal
- 2 - Autopatch used on the System: Yes No
- 3 - Frequency Adjustable Remotes: Yes No
- 4 - Linking to Other Repeaters: Yes No
- 5 - Linking Closed Access: Yes No
- 6 - PL Required on Main Repeater: Yes No Varies
- 7 - PL Required on Linking System: Yes No Varies

Please Return to: **Link Communications Inc.**
1407 4th Ave N
Billings, MT 59101

Comments:

Re-Initialization the Controller

When the RLC-1 powers up, a warm reset is processed. This reset will load the most recent variables into the controller. The variables are stored in the nonvolatile RAM chip located on the controller board. If the variables in the SRAM get scrambled somehow, a cold boot will be needed. This cold boot resets all of the RLC-1's variables to the preprogrammed values. This cold boot is accomplished by pressing and holding the initialize switch and pushing the reset switch. Another easier method of re-initializing the controller is to hold the initialization switch down and applying power to the controller. You must hold the initialize switch down for at least 5 seconds after you either reset the controller or apply power to the controller. Once the controller has been initialized, the reset switch must be pushed again.

You know if the controller has been re-initialized if the voice speaks the message:
"This Is The RLC-1 Repeater And Link Controller V 2.XX"

*** Caution, Initialization will clear all user programmed variables ***

1. Depress the "Initialize (INIT)" switch and hold

2. Depress and Release the Reset Switch while continuing to hold the Initialize switch or while the Initialize (INIT) switch is depressed apply power to the controller.

3. After 5 seconds let go of the "Initialize" switch

4. Depress and Release the Reset switch to Initialize the RLC-1

Resetting the Controller

Resetting the controller is as easy as pressing the Reset switch on the controllers board. The same function is possible by powering off the controller and powering it back on. Software access to a remote reset is possible by executing Command 215. All of these processes will soft boot the controller. When the controller has a soft boot, variables from the internal Non-Volatile SRAM chip will be loaded and used for the controllers operation. A reset will not effect the settings of these variables. Only a re-initialization will change the settings of the internal user programmed variables.

Troubleshooting the Controller

No LED's when the RLC-1 is powered up

Check for +12 Volts at Power Connector
Make sure that the +12 Volts is connected correctly
- Center of Plug is (+), Shield is (-)

No Audio at Test Bus

Check for main system power (All LED's lit)
Is there a valid COR signal present on the receiver: (Default: Active Low)

Have audio at the test bus, but not on the transmitter

Are the output audio pots adjusted correctly
Is the transmitter connected to the controllers audio output: Pin 4 on the DB-09
Is the PTT connected to the controller: Pin 3 (Low on Transmit)

The Voice Synthesizer seems muffled

Turn down the pot marked 'Voice'

When I connect my COR, the RLC-1 will not accept it

My COR is set for active Low, does the COR go to ground when active
My COR is set for active High, does the COR go to ground when inactive
Can the COR sink (2mA) when active
Does the 5V pull-up resistor conflict with your radio
-- Motorola R-100 Repeaters are susceptible to this
-- Open collector the driver on R-100 repeaters

When I connect my serial terminal, I do not get any data

Is your terminals baud rate set to 9600,N,8,1
Are you wired to the correct connector: Serial/Resistor
Are all the RS-232 TX and RX and ground wires connected
The controller requires all RS-232 signals (TX/RX/Ground) the be connected

*** Getting On The Air Quickly ***

Follow the steps below to get your RLC-1 operational and on the air quickly.

1) Read the entire manual or go to step 2

2) Read the 'Setup and Interfacing' section to make sure you have all of the needed parts
   - This section describes how to adjust your controller

3) Wire up your power cord to +12 Volts DC. Center pin is positive, shield is ground.

4) Wire up your radio or audio amp.
   - pin 5 is your audio input (from your receiver audio out)
   - pin 4 is your audio output (to your mike jack or amp audio input)
   - pin 7 is your COR line (active low COR required (Goes to ground when active))
   - pin 3 is your PTT input (active low on PTT (Goes to ground when active))
   - pin 2 is your PL detect input (active low on detect (Goes to ground when active))

5) Once you have your radio connected adjust your audio (See step 2)

6) Programming your controller
   - Command 048 recalls your Voice/CW messages
   - Command 049 programs your Voice/CW messages
   - Command 064 assigns what slot to use for the ID's, courtesy beeps etc...

7) If using an RS-232 port refer to 'Serial Port Interfacing' to get your RS-232 cable built
   - The RLC-1's serial port is not a standard DB-9 serial wiring
   - You must have both RX and TX wired for the serial port to work
   - You must have your grounds connected between the computer and RLC-1 ports

8) Once your serial is connected, press the reset button to see the RLC-1 copyright message
   - If you don't see the reset message check the following conditions
     - Is your Baud rate 9600 N 8 1
     - Do you have your RX and TX leads swapped (Very Common)
     - Are your grounds tied together
     - Is your computer on the correct serial port

9) Now you can DTMF or RS-232 control the RLC-1

10) The serial port does not use command names, only command numbers that range from 000..215.

11) Call Link Communications Inc. for more help after
   - You have read the entire manual
   - Specific questions about the controller operation

Setup and Interfacing

This section of the manual contains everything you should need to know to get your repeater controller up and running. The numbered steps cover the basics, through connecting your radios and adjusting the RLC-1. After that there is information concerning the other input and output features of the RLC-1: the serial interface, the logical output and input lines, and the analog input lines.

Step #1: Check the Packing List
Your package should contain the following items:
(1) RLC-1 Repeater Controller (If purchasing the RLC-1a Controller Package)
(1) RLC-1 Plus Expansion Controller
(1) 2.50mm Power Connector
(2) DB-9 Male Solder Connectors
(1) DB-25 Male Solder Connector
(1) RLC-1a Manual
If any of these parts are missing, contact Link Communications Inc.

Step #2: Connect Power
- The RLC-1 is designed to run off of 12V DC. 11V to 14V should work fine.

- Locate the 2.50mm power connector included in your parts bag.

- Unscrew the plastic outer shield and thread your power and ground wires through it (20 gauge suggested).

- Solder the +12V wire to the center pin of the 2.50mm connector.

- Solder the ground wire to the shield of the 2.50mm power connector.

- Screw on the plastic outer shield.

- When power is applied to the RLC-1 controller, the DTMF LED will flash momentarily. This indicates proper board operation.

Step #3: Connecting Your Receivers to the RLC-1
The main repeater and each of the links connect to the RLC-1 using a male DB-9 connector (included). The control receiver connects to the same DB-9 as the main repeater. The pin-outs are listed below.

Port 1 (Repeater Port)

Pin #	Signal Name	Default Condition
1	Ground Available	....
2	PL Decoder Input	Active Low
3	Transmitter PTT	Always Active Low
4	Transmitter Audio	Audio Output, 600Ω
5	Receiver Audio	Audio Input, 10KΩ
6	Ground Available	....
7	Receiver COR Input	Active Low
8	Ground Available	....
9	Ground Available	....

Ports 2 (Link or Repeater Port)

Pin #	Signal Name	Default Condition
1	Ground Available	....
2	PL Decoder Input	Active Low
3	Transmitter PTT	Always Active Low
4	Transmitter Audio	Audio Output, 600Ω
5	Receiver Audio	Audio Input, 10KΩ
6	Ground Available	....
7	Receiver COR Input	Active Low
8	Ground Available	....
9	Ground Available	....

Connecting the Receiver COR

- The first step in connecting your receiver is to locate the receivers COR signal. The RLC-1 will accept either active low or active high COR signals. The default COR is set to **Low**. The signal must be able to sink 4mA to ground. The input impedance of the RLC-1 COR input is 10KΩ and it is diode clamped with internal pull-up resistors. This allows it to handle input voltages of up to 15 volts without damage to the controller. **The COR input must not go below 0V (ground); this would damage the uProcessor IC.** Using one of the supplied DB-9 Male connectors, connect your COR signal to pin #7 (or pin #1 for the control receiver). Refer to Commands 024 and 025 to change your ports COR and PL polarity.

Connecting a PL Input (optional)

- If you wish to use a PL (CTCSS) decoder on any of the receivers, it can be connected to pin #2 of the appropriate connector in the same fashion as the COR input. This signal can be either an active low or active high signal. Refer to Commands 024 and 025 to change your ports COR and PL polarity.

Connecting the Receiver Audio

- 2 types of audio can be used on the RLC-1 controller:
  - Type 1: De-emphasized audio (Speaker Audio)
  - Type 2: Discriminator audio (Raw Unsquelched Audio)
- If type 1 audio is used, remove the appropriate jumper on the controller. This removes the de-emphasis filter from the circuit. As the controller comes shipped, all ports are set up for type 2 audio.

Receiver De-emphasis Jumpers

J1 - Port 1 Receiver De-emphasis Jumper
J2 - Port 2 Receiver De-emphasis Jumper

- If type 2 audio is used, place the appropriate jumper in circuit (over both pins). This will place a -6dB/octave de-emphasis filter into the circuit. Some discriminators can not directly drive the 10KΩ input impedance. If this is the case, a pre-driver or different audio access point will be required. The filter will not allow PL to pass through the controller. Contact Link Communications Inc. if your needs require PL to pass through the controller.

- The audio input is connected to pin #5 of the male DB-9 connector (pin #6 for the control receiver).
- The audio adjustments will be described in Step #4.

How the DTMF Decoder Works

- The RLC-1's DTMF decoding circuit uses a scanner that enables the controller to receive tones from all the ports, without mixing the three receiver's audio together. This allows the receivers to have total control of the DTMF decoder when its COR is active. If the control receiver is active, and the control receiver is configured for priority control, then the DTMF decoder is locked to the control receiver's port until its COR goes away. Once the decoder has detected a tone on one of the ports, it stops scanning and waits up to three seconds for the next digit. It is reset at the beginning of each DTMF digit. If any of the DTMF digits are held for longer than 5 seconds or there is a pause of 5 seconds between digits, the DTMF scanner will resume scanning and all digits entered up to that point are lost.

Step #4: Connecting Your Transmitters to the RLC-1

Transmitter PTT
- The RLC-1 produces an active low PTT signal (ground when PTT is active). This output is buffered with an open collector type driver capable of sinking 150mA. There is a built in 30V zener clamping diode to protect the PTT MOSFET from the high voltage spikes that can be caused by interfacing to a PTT relay coil. Your transmitter PTT input should be connected to pin #3 of the DB-9 connector.

Transmitter Audio
- The RLC-1 provides a 10KΩ output impedance to your transmitter audio input.
- The transmitter audio is connected to pin #4 of the DB-9 connector.
- If it is not already, the DB-9 plug can now be plugged into the appropriate jack on the main board. Port 1 is located nearest to the jack nearest the power jack, Port 2 is right next to it (with the DB-9s toward you).

Step #5: Adjusting the RLC-12 Controller

- Locate connector J10 on the RLC-1 (It is the 6 pin female connector). This test bus will provide the signals that we need to adjust the inputs on the RLC-1. In order to maintain audio deviation during channel switching, all of the receiver inputs to the Cross-Point must be set to the same level. These signals can be measured with an oscilloscope or a true RMS AC voltmeter. In order to obtain an audio signal on J10, a valid COR or PL must be received. Once a valid access signal is received, the RLC-1 will un-squelch the audio and be present on J10.

Repeater (Port 1) Receiver Adjustment:
- Execute Command 000 12 to enable Port 1-Port 2

Port 1 Receiver: Transmitter Port Adjustment:
- Present a stable Tone or DTMF tone to Port 1 RX.
- Adjust the 'Main REC' pot so that the signal on pin 1 of J10 is 1 volt peak-to-peak.
- Adjust the 'Main TX' pot to obtain the desired deviation.

Port 2 Transmitter Port Adjustment:
- Adjust the 'Link TRANS' pot to obtain the same deviation as the Main TRANS is.

Port 2 Receiver Port Adjustment:
- Present the same Tone or DTMF signal used in Port 1 receiver: transmitter port adjustment step. While watching the Port 1 TX audio, adjust 'Link REC' pot for the same deviation that was present on the Port 1's TX.

Voice and Tone Level Adjustments:
The voice pot, located on the 'Plus' board, adjusts the level of the voice. Each ports overall level for the voice and the tones is adjusted using the Main Tone and Link Tone pots. In order to correctly adjust the individual levels the user must first do the following:

1) Generate a long tone 1 KHz tone using Command 042.

- <042> 1000 1000 999 001 ; generates a 1000Hz tone on both generators for 9.9 secs.

2) Adjust the tone deviation for the maximum deviation you require for your tone system. Pot marked ‘Main Tone’ adjusts Port 1's level. ‘Link Tone’ adjusts port 2's level. You may decrease your tones level using Command 116.

3) Generate a voice message using Command 045. Adjust the “Voice” level pot located on the “Plus” module to 2.0KHz maximum deviation, or what ever “sounds” pleasant.

Serial Port Interfacing

The RLC-1 has a serial terminal port for interfacing to any serial device, i.e. packet and serial terminal. This allows the user to monitor, control, and program all facets of the controller. The serial terminal carries highest priority for access and programming of the RLC-1.

RS-232 Signals and Interfacing

The RLC-1 output is the RS-232 standard, ±12V. The serial terminal port also contains the I/O pins for the software controlled resistors. (See the Software Resistor Section for interfacing programming information).

Pin-Out Serial P1 Connector

Pin Number	DB-09 Computer	DB-25 Computer	Signal Definition
3	3	2	RS-232 Input
5	5	7	Ground
2	2	3	RS-232 Output

Local Terminal Interfacing

When using a local ASCII terminal at the RLC-1's location, an ASCII terminal can be used to communicate with the programming features of the RLC-1. The terminal's communication parameters must be set to:

Baud (Default).... 9600, Start Bits.... 1, Stop Bits ....1, Parity .... N, Word Length 8

These parameters will allow communication with the RLC-1. For system operations, see the next section "Operation and Programming Over the Serial Port".

Configuration of the Serial Port

- Command 214 is provided to configure the serial port baud rate.

-- Baud rate: Allows baud rate changes from 300,600,1200,2400,4800, and 9600 baud.

Operation and Programming Over the Serial Port

- The RLC-1's serial port gives the controller the ability to communicate with the world over a digital radio link.

Serial Command Structures:

• Upper or Lower case digits may be used for the DTMF digits 'ABCD'

• All commands entered must be the commands 3 digit number that ranges from 000..215

• Spaces, Tabs, and backspaces can be used over the serial port

• Comments must begin with the ';' colon digit first. Any data following the ';' will be ignored.

Example: 000 11 ; This command convert port 1 into a repeater port

The example shows the command number as '000' with additional data of '11' and a comment that begins with the ';' digit.

• The command sequence can be entered with either the <ENTER> key or the forced execution digit. This digit defaults to the 'D' key.

Serial Response:

• Voice words are printed in 2 styles

- When the word is a number between 0..9 and\or the word is a letter of the alphabet

The word is printed [X] where 'X' is the information

- When the word is other than the above listed conditions

The word is printed (###) where '###' is the word number

System Wide Errors

The controller has several error messages that can be spoken if an error occurs during programming. These errors indicate that the format of the command requested does not match the data that you entered. If you get errors other than the errors listed in this section, refer to the command that you were trying to execute for more specifics.

Error 1..5 - These errors are not system wide errors. Refer to the command you are executing if you get one of these errors.

Error 6 - The command you requested is not allowed to be executed from this radio port. The command is DTMF masked off. Either change the DTMF mask (See Command 030,031) or try another radio port.

Error 7 - The command you requested is locked. You must unlock the controller using Command 005 or Command 026 before this command will be executed.

Error 8 - The command that you requested is above the requested command names. You should never get this command. If this command is spoken execute Command 244 and serially view the command names for any problems or contact Link Communications Inc.

Error 9 - The command you are trying requires more or less additional data before it can be executed. Verify the format of the command and the amount of additional data that the command requires before trying to execute it again. If the command requires 5 digits of additional data then 5 digits must be entered

Example: Command 000 connects one radio port to another. This command requires 2 fields of data be entered for the command to execute correctly. If you enter less than 2 variables, then controller will speak 'Error 9'. Check your data and then check the command and enter everything required.

Chapter 2: Port Connection Commands

This section describes the commands used to connect the various ports of the controller together. A port indicates where audio goes in\out of the controller.

000: Connect one Port to another Port

This command allows you to connect one radio port to another radio port. It is also used to put a port into "repeater mode", by connecting that port to itself. "Connecting a port" means that the audio in and keying source from each port become the audio out and PTT source for the other port. Connecting a port to itself makes the audio that comes in your repeater's receiver go out your repeater's transmitter, making it into a repeater. If you connect two different ports together, they will hear the activity from the other port.

<000> *x y*

Parameters:

- X is the first port to connect
- Y is the second port to connect

Ports range from 1..2

1 - Port 1

2 - Port 2

Defaults:

- Port 2 default as a link, Port 1 defaults as a repeater

Error Codes:

E1 - Invalid port requested

(System wide errors are listed in front of the manual)

Example 1:

Connect Port 1 to Port 2

000 12 D or unkey

Voice response "1 2 Connect On"

Want port 1 as a repeater port

000 11 D or unkey

Response:

"X Y Connect On"

001: Monitor one Port from another Port

This command allows you to monitor one radio port from another radio port.

<001> *x y*

Parameters:

- X is the port doing the monitoring of port Y
- Y is the port being monitored

Ports range from 1..2

1 - Port 1
2 - Port 2

Defaults:

- Port 2 default as a link, Port 1 defaults as a repeater

Error Codes:

E1 - Invalid port requested

(System wide errors are listed in front of the manual)

Example 1:

Monitor Port 2 by Port 1

001 12 D or unkey

Response:

"X Y Connect Monitor"

002: Disconnect one Port from another Port

This command allows you to disconnect one radio port from another radio port.

<002> *x y*

Parameters:

- X is the first port to disconnect
- Y is the second port to disconnect

Ports range from 1..2

1 - Port 1
2 - Port 2

Defaults:

- Port 2 default as a link, Port 1 defaults as a repeater

Error Codes:

E1 - Invalid port requested

(System wide errors are listed in front of the manual)

Example 1:

Disconnect Port 1 from Port 1

002 11 D or unkey

Voice response "1 1 Connect Off"

Port 1 is currently a repeater port and you want the port configured as a link port.

002 11 D or unkey

Response:

"X Y Connect Off"

009: Checking Cross-Point Connections

This command allows you check the audio crosspoint conditions on all radio ports on the controller. This command will check the connected conditions and both show the crosspoint map on the RS-232 serial port if executed from the RS-232 port, and will speak the conditions out the port that DTMF requested the conditions.

<009>

Parameters:
There are no parameters for this command

Defaults:
There are no defaults for this command

Error Codes:
(System wide errors are listed in front of the manual)

Response:
Voice Format:

1 Connect <TX1> <TX2>
2 Connect <TX1> <TX2>

Serial Format:

		TX	
		1	2
	1	.	.
RX	2	.	.

An 'x' indicates connection and a '.' indicates no connection.

010: Time-Out Timer Enabled/Disabled

This command allows the user to enable/disable the time-out timer port a selected port.

<010> *x y*

Parameters:
X is the port. This number ranges from 1..2
Y is the control information.
1 - Enable Time-out timer
0 - Disable Time-out timer

Defaults:
Port 1 time-out timer is enabled
Ports 2 time-out timer is disabled

Notes:
- The FCC requires a 3 minute time-out timer on all repeater channels

Error Codes:
E1 - Invalid port. Port must range from 1..2
(System wide errors are listed in front of the manual)

Example 1:
I want to enable the time-out timer on Port 2's repeater

010 2 1 D or unkey

Response:
"Port <ON/OFF>"

011: Check Time-Out Timer Status

This command checks the status of the time-out timers.

<011> *x*

Parameters:
X is the port. This number ranges from 1..2

Defaults:
Port 1 time-out timer is enabled
Ports 2 time-out timer is disabled

Notes:
- The FCC requires a 3 minute time-out timer on all repeater channels

Error Codes:
E1 - Invalid port. Port must range from 1..2
(System wide errors are listed in front of the manual)

Example 1:
I want to make sure the time-out timer is enable for port 2.

011 2 D or unkey

Response:
"Port <ON/OFF>"

012: Program a Receiver's Access Mode

This command allows the user to set the receiver's access mode.

<012> *x y*

Parameters:
X is the receiver that the access mode is being changed. This number ranges from 1..2

Y is the access mode

Access Modes Number	Access Mode Description
0	No Access from the receiver
1	COR Access
2	PL Access
3	COR and PL Access
4	COR or PL Access

Defaults:
All ports default to COR (1) access

Error Codes:
E1 - Invalid port. Port must range from 1..2
E2 - Invalid access mode. Modes are listed above.
(System wide errors are listed in front of the manual)

Example 1:
I want port 1 to require both COR and PL for access.

012 1 3 D or unkey

Response:
"Port is <Access Mode>"

013: Checking Access Modes

This command checks the settings of the ports access modes.

<013> *x*

Parameters:
X is the port number

Response:

Access Modes Number	Access Mode Description
0	No Access from the receiver
1	COR Access
2	PL Access
3	COR and PL Access
4	COR or PL Access

Defaults:
All ports default to COR (1) access

Error Codes:
E1 - Invalid port. Port must range from 1..2
(System wide errors are listed in front of the manual)

Example 1:
I am getting noise on my port 2. I need to see if it is still in COR and PL mode.

013 2 D or unkey

Response:
"Port is <Access Mode>"

014: Port Supervisory PTT Control

This command allows the user to command off the system PTT for a selective port. Only the transmitter PTT is controlled. To control receiver access see Command 12

<014> *x y*

Parameters:
X is the port. This number ranges from 1..2
Y is the control information.

1 - Enable Supervisory PTT control **(Kills Transmitter)**
0 - Disable Supervisory PTT control **(Enables Transmitter)**

Defaults:
All ports transmitter enabled

Error Codes:
E1 - Invalid port. Port must range from 1..2
E2 - Invalid access mode. Modes are listed above.
(System wide errors are listed in front of the manual)

Example 1:
I need to shut off port 1's transmitter PTT because of some noise

014 1 1 D or unkey

Response:
"Port is <ON/OFF>"

015: Check Port Supervisory Control Settings

This command checks the settings of Command 014

<015> *x*

Parameters:
X is the port. This number ranges from 1..2

Defaults:
All ports are enabled to transmit

Error Codes:
E1 - Invalid port. Port must range from 1..2
(System wide errors are listed in front of the manual)

Example 1:
My port 2 transmitter will not activate. I need to see if it is enabled

015 2 D or unkey

Response:
"Port is <ON/OFF>"

018: Receiver Active - Inactive Control Command Execution

This command allows the user to enable/disable the execution of commands when the receiver goes from inactive. If this command is disabled for a port, the user must force the execution of the command in order for it to be accepted. When this command is enabled on a port, simply the receiver drop can execute a command

<018> *x y*

Parameters:
X is the port. This number ranges from 1..2
Y is the control information.
1 - Enables Receiver drop to execute a command
0 - Disables Receiver drop to execute a command

Defaults:
All ports allow receiver drop to execute a command sequence

Error Codes:
E1 - Invalid port. Port must range from 1..2
E2 - Invalid access mode. Modes are listed above.
(System wide errors are listed in front of the manual)

Example 1:
I need to keep users on the repeater from executing commands when they DTMF page other users.

018 1 0 D or unkey

Response:
"Port is<ON/OFF>"

019: Check Receiver Active - Inactive Command Execution

This command checks the settings of Command 018.

<019> *x*

Parameters:
X is the port. This number ranges from 1..2

Defaults:
All ports allow receiver drop to execute a command sequence

Error Codes:
E1 - Invalid port. Port must range from 1..2
(System wide errors are listed in front of the manual)

Example 1:
I want to make sure port 1 does not execute commands with a receiver drop

019 1 D or unkey

Response:
"Port is <ON/OFF>"

024: Controls a Port's COR/PL Polarity

This command allows the user to customize the COR and PL levels. Every radio differs in how the COR and PL levels are present when the receiver is active. This command allows either active high or active low COR and PL signals to be accepted. If your receiver is active high and you need to change the COR/PL polarity and you do not have a serial terminal to change it for you, then you need to fake the COR input by tying the COR input to ground while entering Command 024. Make sure you have disconnected the ports COR input before forcing the COR to ground.

<024> *x y*

Parameters:
X is the port. This number ranges from 1..2
Y is the COR and PL mode

COR and PL Mode	COR and PL Levels
0	Both COR and PL active Low
1	COR Active Low, PL active High
2	COR Active High, PL active Low
3	COR and PL active High

Defaults:
Both COR and PL are active Low

Notes:
- When a receiver is not connected to the controller, the COR and PL levels on that port must be set to active low (Mode 0)

Error Codes:
E1 - Invalid port selected
(System wide errors are listed in front of the manual)

Example 1:
I want to connect a GE Master II receiver to my repeater port. This receiver has an active high COR output.

024 1 1 D or unkey

Response:
"Port is <Mode>"

025: Interrogates a Port's COR/PL Polarity

This command checks the setting of Command 025

<025> *x*

Parameters:
X is the port. This number ranges from 1..2

COR and PL Mode	COR and PL Levels
0	Both COR and PL active Low
1	COR Active High, PL active Low
2	COR Active Low, PL active High
3	COR and PL active High

Defaults:
Both COR and PL are active Low

Notes:
- When a receiver is not connected to the controller, the COR and PL levels on that port must be set to active low (Mode 0)

Error Codes:
E1 - Invalid port selected
(System wide errors are listed in front of the manual)

Example 1:
I want to check port 2's COR and PL polarity before I connect a new receiver.

025 2 D or unkey

Response:
"Port is <Mode>"

Chapter 2 Examples

Example 2-1: Configuring a Port as a Repeater, Link

Repeaters and links indicate how a port is configured.

Repeater

A repeater is defined as a port that loops the ports receive audio out the ports transmitter. When the receiver becomes active, the transmitter of the same port should go active. When the receiver goes from active to inactive, a courtesy beep and hang time will be generated. It is required that the radios on a repeater port be only full duplex.

To convert a port into a repeater port the following command is used

000 X X

Where X and X are the same number indicating what port the repeater is on

When the port is looped back the courtesy beep is on port 'X', ID's are started and routed to port 'X'. Time-out timers, if enabled, are running when port 'X's receiver is active.

Link

A link is defined as a port that does not loop the ports receive audio out the ports transmitter. When the receiver becomes active, the transmitters of all connected ports should go active except its own port. A link can be either half or full duplex. Full duplex links allow the ports transmitter to operate without effecting the receivers function. Half duplex links are similar to full duplex with the exception that the transmitters operation causes the receiver to be shut-off.

To convert a port into a link port the following command is used

002 X X

Where X and X are the same number indicating what port the link is on

When the port is a link the courtesy beep is on port 'X' is only routed to port 'X' if the audio routing variable is not 00 (Refer to Command 064 for audio routing variables). ID's are enabled but only controlled by the other connected ports. Time-out timers, if enabled, are running when port 'X's receiver is active.

Monitoring a port

It is handy to monitor a connected ports receiver without keying the ports transmitter. Because the controllers full duplex ports, the controller can be monitoring another ports receiver while the monitoring port continues to have a conversation.

To monitor a port from another port the following command is used

001 X Y

Where X is the port doing the monitoring of port Y, Y is the port being monitored

Example 2-2: Enable Time-Out Timers

Time out timers are a legal requirement on repeater system. The controller supports separate time-out timers on each receiver port. The time-out timer is assigned to a receiver, not the transmitter. Because the transmitter is keyed-up more continuous that the receivers, and because the time-out timers need a break in activity in order to reset their timers, the receivers are use as the control function. Because of this each port that is able to control the radios transmitter has a time-out timer. It is standard to configure the timers for 3 minutes of activity cause a time-out.

1) Enable all ports time-out timers
2) Program the time-out timers for 3 minutes

Enable all port time-out timers:

Command 010 is assigned to control each ports time-out timer. This command requires 2 digits of additional data to configure the command. The first digit is the port requested, the second is the control variable.

Port 1:	010 1 1 D or unkey	; Time-out timer enabled
Port 2:	010 2 1 D or unkey	; Time-out timer enabled

Program the time-out timers for 3 minutes

Command 052 programs the timers on the controller. Timers 02..03 are assigned for the separate time-out timers. These timers are programmed in 10sec. increments. 3 minutes = 10 sec. * 018. This command requires 5 digits of additional data to configure the command. The first two digits select what timer you are programming, the next 3 program the time from 001..999.

Port 1:	052 02 018 D or unkey	; Time-out timer time at 3 minutes
Port 2:	052 03 018 D or unkey	; Time-out timer time at 3 minutes

Time-out timers are now all enabled and set for 3 minutes. If the timer expires, all transmitters the pot that timed out will be disabled for the timed out port. When the ports receiver goes from active to inactive, connected transmitters will now again be enabled to carry the ports signal.

Time-out timer messages:

Each port contains its own custom time-out timer event. These events are called when the port times out, and again when the port comes out of a timed out condition. Refer to commands 063,064,065 to program the event tables events.

Example 2-3: Configuring a Ports COR/PL Polarity

In order for the controller to recognize a ports receiver:
The receivers COR signal is used to tell the controller when the receiver is active
An external decoder can be used to decode a receivers CTCSS 'PL' tone for controller access

Each one of these signals can be either high when active, or low when active.

What 'High' really means

A 'High' COR or PL signal indicates the input goes from a ground (0Volts) to either an open (High Z) or to a voltage above 4 volts. The controller has protection that safely allows 'High' voltages up to 15 volts without any damage to the controller. With a voltage meter you will read a voltage on the COR and PL inputs with nothing connected. This indicates the input is 'Pulled Up'. An input is 'pulled up' so the controller always has a voltage on the COR and PL inputs. This keeps the inputs from floating between 'High' and 'Low'

If you do not have a receiver connected to the controller, the controller will treat the COR and PL active high. It is very important to tell the controller the COR and PL inputs are active low if nothing is connected to the port.

What 'Low' really means

A 'Low' COR or PL signal indicates the input goes from an open or a voltage above 4 volts to ground (0Volts). Ground does not mean open or nothing connected to a pin. Ground means just that, ground or the same voltage and impedance as your power supply (-) terminal. The controller has protection that safely allows 'High' voltages up to 15 volts without any damage to the controller.

If you do not have a receiver connected to the controller, the controller will treat the COR and PL active high. It is very important to tell the controller the COR and PL inputs are active low if nothing is connected to the port.

Polarity Control

Once you have determined the ports COR and PL polarity you need to configure the controller to accept the correct polarities. The controller defaults to active 'Low' on both the COR and PL inputs of all ports. If your receivers are already 'Low' you do not need to change the configuration. If you polarity is active 'High', you need to execute Command 024 and tell the controller your correct polarity.

Active 'High' COR and active 'Low' PL (Or no PL at all) on Port 1 is configured as:
024 1 1 D or unkey (Refer to command 024 for more information)
This configured port 1 for active 'High' COR and active 'Low' PL

Chapter 3: System Audio Control

This chapter deals with the system audio controls. In this chapters commands that deal with audio routing of messages, execution of commands based on the audio routing, and how errors are spoken when encountered.

003: User Control if Errors are Spoken

This command allows the users to enable\disable the speaking of errors. Errors are sent if the format of the input data is not as the command requested requires.

<003> *x*

Parameters:

X - the Control variable

1 - enables errors to be spoken

0 - disables error to be spoken

Defaults:

Errors speaking is enabled.

Error Codes:

E1 - Invalid port requested

(System wide errors are listed in front of the manual)

Example 1:

I want to disable the errors from being spoken

003 0 D or unkey

Response:

"Error Squawk <ON\OFF>"

007: Set Up the System's Audio Routing Variables

This command allows the user to set-up the system audio routing variables. These variables tell the controller where to route messages when commands are executed. This allows the user to totally control where CW and Voice messages are routed.

<007> *x y*

Parameters:
X is the audio routing slots
Y is the audio routing variable calculated below

Device that Executed the Commands (XX)	Audio Routing Variable
00: Internal Audio Routing Variable	01: Route to Port 1
01: RS-232 port	01: Route to Port 1
02: Not Used	01: Route to Port 1
03: Port 1	01: Route to Port 1
04: Port 2	02: Route to Port 2
05: Event Table	00: Use the routing variable in the event

Calculation of the audio routing variable:

The audio routing variable is calculated by adding up a number that corresponds to the port you want the response to be routed to. This number ranges from 0..9.

DTMF Executing the Command	Number that corresponds to the device
Port 1	+1
Port 2	+2

(Y) Audio routing variable = (port1)+(port2)

Error Codes:
E1 - Invalid audio routing source
E2 - Audio routing variable to big. Must range from 0..9
(System wide errors are listed in front of the manual)

Example 1:
I want all commands executed from Port 2 to be routed out both Port 2 and Port 1.

1) Look-up port 2's audio routing slot.

Slot 04 is port 2

2) Develop an audio routing variable that includes port 1,2

Audio Routing Variable = 1(Port 1)+2(Port 2) = 03

3) Execute Command 007

```
007 4 7 D or unkey
```

Response:

'Port' is 'Audio Routing Variable'

008: Recall the System's Audio Routing Variables

This command recalls the settings programmed in Command 007.

<008> *x*

Parameters:

XX is the audio routing slots. This number must range from 00..12

Defaults:

There are no defaults for this command

Error Codes:

E1 - Invalid audio routing source

(System wide errors are listed in front of the manual)

Example 1:

I want to see what the audio routing variable is for Port 2

008 4 D or unkey

Response:

"Slot is ARV"

039: Change the Internal Audio Routing Variable

This command allows the user to change where messages are routed that are called from internal execution sources. Internal execution sources include macros and internal generated messages and errors.

<039> *x*

Parameters:
XX is the audio routing variable. This number must range from 00..43

DTMF Allowed Execution of the Command	Number that corresponds to the device
Port 1	+1
Port 2	+2

(X) Audio routing variable = (port1)+(port2)

Defaults:
Internal audio routing variable is port 1 (X=1)

Error Codes:
E1 - Invalid audio routing variable

Example 1:
I want all internal responses to be routed to port 2, not port 1.

039 2 D or unkey

Response:
There is no response for this command.
- To check your programming execute Command 008 0.

020: Port DTMF Mute Control

This command allows the user to control the DTMF mute function on a ports transmitter. When the mute is enabled for a transmitter, no DTMF tones will be re-broadcasted out the transmitter.
If the port is a link, and you have enabled DTMF mute for that ports transmitter, then the PTT along with the audio will be muted when a DTMF is received. This only applies if the port is a link. On repeater ports, only the audio is muted, not the PTT.

<020> *x y*

Parameters:
X is the port. This number ranges from 1..2
Y is the control information.
1 - Enables DTMF mute on the transmitter
0 - Disables DTMF mute on the transmitter

Defaults:
Port 1 DTMF mute is Enabled
Port 2 DTMF mute is Disabled

Error Codes:
E1 - Invalid port. Port must range from 1..2
E2 - Invalid access mode. Modes are listed above.
(System wide errors are listed in front of the manual)

Example 1:
I want DTMF mute enabled on port 1 transmitter.

020 1 1 D or unkey

Response:
"Port <ON/OFF>'

021: Check Port Mute Controls

This command check the settings of Command 020.

<021> *x*

Parameters:
X is the port. This number ranges from 1..2

Defaults:
Port 1 DTMF mute is Enabled
Port 2 DTMF mute is Disabled

Error Codes:
E1 - Invalid port. Port must range from 1..2
(System wide errors are listed in front of the manual)

Example 1:
Receivers seem to be muting when they talk loud. I need to see if DTMF mute is enable for port 2's receiver.

021 2 D or unkey

Response:
"Port <ON/OFF>'

022: Set-up DTMF Cover Tone Variables

This command allows the user to set-up the DTMF cover tone frequencies and if a cover tone is used when muting the DTMF tones

Setting up the Cover tone enable/disable

<022> *x*

Setting up to Cover tone frequencies

<022> *xxxx yyyy*

Parameters:
X is the control variable (When setting up Cover tone enable/disable)
1 - enables cover tone when DTMF mute active
0 - disables cover tone when DTMF mute active

XXXX and YYYY is the cover tone frequency. (See Appendix B)

Cover Tone Level:
Refer to Command 116, event 4, to control the cover tone's tone level

Defaults:
- Cover tone is enabled
- Cover tone frequency is 1000Hz

Error Codes:
E1 - Invalid tone frequency
E2 - Invalid Cover tone mode
(System wide errors are listed in front of the manual)

Example 1:
I want a cover frequency of 1000 Hz and 1500 Hz.

022 1000 1500 D or unkey

Response:
Either "ON/OFF" when controlling cover tone or "Frequency is XXXX and YYYY"

Chapter 3 Examples

Example 3-1: RLC-1 Audio Routing Variables

In order for your voice/cw messages to be routed where they are intended to go, you need a good understanding of audio routing variables and their function.

Defining the system audio routing variables is accomplished using Command 007. This command lists the sources involved with executing commands.

Command 007 definitions:

Variable 0 define internal events. Internal events are messages that are requested from the internal audio routing variable. Run-time access to this variable is accomplished using Command 039. This variable is mainly not used. Applications for this variable is you want a message routed to places other than the port that executed the event. Default routing of messages is the port that executed the command. The routing defaults to 1, Port 1

Variable 1 defines serial events. When commands are executed from the serial port the responses are routed to the serial port, along with any combination of radio ports. This variable defaults to 1, Port 1. If you enter a variable of 0, the messages will only be routed to the serial port and no other ports.

Variable 2 defines scheduler events. This event is not used. The scheduler events enter the routing variables to be used when the scheduler event is entered using Command 064. You should never have to change this variable. It defaults to 1, Port 1

Variable 3 defines execution from Port 1. This variable defaults to routing responses out only Port 1.

Variable 4 defines execution from Port 2. This variable defaults to routing responses out only Port 2.

Variable 5 defines execution from the event table. This variable is a master variable that overrides the audio routing variables that are entered with every event. When this variable is set to 0, the audio routing information that is part of the event will be used. If you change this audio routing variable to something other than 0, the value entered with Command 007 will contain the routing information. It defaults to 0, use the audio routing information from the event tables events.

Event table audio routing definitions:

The event tables audio routing variables work similar to Command 007's variables with a few exceptions.

Exception 1:

If the audio routing variable entered for an event is 0, the audio is routed to the source that executed the command. If the serial port executes a command with a routing variable of 0, the response is routed out only the serial port. If a DTMF channel executes the same command, the response will be routed out the DTMF's channel.

Exception 2:

If Command 039 is present in the event tables execution. This command can change the routing of messages to selected ports thus bypassing all preset audio routing variables.

Conclusion:

Normal audio routing variables route to radio ports. Event audio routing is the same except you can assign three special cases that give more flexible routing to commands.

Example 3-2: I want to enable DTMF muting on port 1,2

I want to enable DTMF muting on ports 1 and 2. Port 2 connects to a link system that needs to receive all DTMF codes entered.

Command 020 controls the enable or disable of selected ports for mute control. The format of the command requires 2 digits of control data entered in order for the command to execute correctly. The first data is the port number, the second is the control variable.

Port 1 control:

```
020 1 1 D or unkey          ; This enables muting on Port 1
```

Port 2 control:

```
020 2 1 D or unkey          ; This enables muting on Port 2
```

Example 3-3: I want to disable DTMF cover tone on muted ports

When the user enables DTMF muting the controller inserts a cover tone to break the silence of the muting action. The feature is nice so users do not key-up on you while you are programming the controller. Without the cover tone, the general user hears only silence. With the cover tone the general user hears a repeating tone beacon while DTMF data is being entered. The controller defaults the cover tone enabled.

To disable the mute control:

```
022 0 D or unkey            ; Tone cover is now disabled. Only audio mute is enabled
```

Example 3-4: When some people talk, the DTMF cover tone covers them up for a short period of time.

The situation that you are noticing is called DTMF falsing. When the person talking causes the DTMF decoder to recognize the voice products as a DTMF digit, then controller does not know any better. So the controller starts the cover tone and mute (if enabled, see command 020). Once the cover timer has expired, and there is no DTMF digit present, the cover tone/mute is turned off (see command 052 for setting the length of your cover timer). This condition has been addressed in software version 4.30 and later. The fix is a timer that is set, that will delay the start of the DTMF cover/mute timer. When a DTMF false occurs, the controller will start this timer and if the DTMF digit is still present after this timer expires, then it starts the normal cover/mute process. If the DTMF digit received is a voice falsed DTMF digit, then the mute will never start because in most cases, the voice product that started cover/mute process will no longer be present.

Reference: See timer #14, command 050,051,052. This timer is set for 50mS out of initialization. If you set this timer to long, then the cover/mute process will not run correctly.

Chapter 4: System Security

This chapter deals with system security and command name execution controls. Because all ports have the ability to access the commands in the controller, certain provisions are needed to protect execution.

004: Setting Up the Master System Unlock Codes

The controller supports 2 types of password system.

- Type 1: Fixed password length from 1..15 digits

Passwords length is determined by the number of digits you enter with Command 004. If you want a 4 digit password, simply enter 4 additional digits when programming. The limits to this style of access is if someone figures out your password they can access the controller. Fixed password access is available with Command 026

- Type 2: Challenged password with 4 digits entered from a table of 16 digits

Password length is fixed to 4 digits. These 4 digits are requested by the controller when executing Command 005. The controller will speak "Please Enter Code X X X X". 'X' corresponds to a number in the table of user entered numbers. Command 004 is used to enter these user defined digits.

- When the user requests access to certain commands, and the controller speaks "Error 7", this indicates the need to unlock the controller before execution of the command is allowed. The user must execute Command 005 (Challenged Passwords) or Command 026 (Fixed Passwords) inorder to unlock the controller. These codes are programmed with this command.

<004> *(See Below for challenged Passwords)*

or...

<004> *x..x (Fixed Passwords)*

Parameters:

Fixed Passwords:

X..X is the fixed password that ranges from 1 to 15 digits

Challenged Passwords:

The user must enter 16 digits from the DTMF pad. The digits can be any valid DTMF digit. It is very important to remember these codes for they access the master unlock command. If you forget the digits, and try to access a locked command, then re-initialization of the controller is the only way to access the command.

Challenged Password Look-up Table:

Requested Digits	Default Digits	User Entered Digits
0	1	
1	2	
2	3	
3	4	
4	5	
5	6	
6	7	
7	8	
8	9	
9	#	
10	#	
11	1	
12	2	
13	3	
14	4	
15	5	

Error Codes:

(System wide errors are listed in front of the manual)

Example 1:
I want to change the access codes to my own codes

```
004 ABC*1234###94123
```

Response:
The controller will not speak back the codes for security.
"System Lock Codes O K"

005: Unlocking the Controller with Challenged Passwords

This command allows the user to unlock the controller for accessing locked commands. This command only works if you have set-up the system for challenged passwords. The user will execute Command 005 and the controller will request unlock codes. These codes can be embedded with garbage codes for added security. The controller only requires the 4 requested codes to be entered in the requested sequence. Refer to Command 004 to program the access password.

User: Request password

```
<005>
```

Controllers voice: " Please enter code # # # #"

User enters the password to unlock the controller

```
<005>...PPPP...
```

Controllers voice: "System Lock On" If the wrong password entered
or
Controllers voice: "System Lock Off" If the correct password entered

Parameters:
...PPPP... is the password information. The '...' indicate garbage data can be entered before and after the group of password data is entered.

Defaults:
The password defaults are listed in Command 004's table.

Notes:
- Please note the password if you change it. Serial can bypass the unlock sequence if specified. If you do not note the password table, the serial may be able to change the table if Command 004 is not locked on the serial port.

Error Codes:

(System wide errors are listed in front of the manual)

Example 1:
The user enters Command 005 to get a password and the controller states codes 1,3,5,9 are needed. The user enters the following.

```
005 34512  1 3 5 9 #AB1239
```

The data '34512' and '#AB1239' is garbage data. The codes '1 3 5 9' is the correct password. The controller responds 'Controller Lock Off' indicating the lock is now disabled.

Response:

"Controller Lock Off" or "Controller Lock On" or "Please enter Code # # # #"

026: Unlocking the Controller with Fixed Passwords

This command allows the user to unlock the controller for accessing locked commands. This command only works if you have set-up the system for fixed passwords. The user will execute Command 026 followed by the fixed password that was entered with Command 004. Refer to Command 004 to program the access password.

User enters the password to unlock the controller

<026> P..P

Controllers voice: "System Lock On" If the wrong password entered
or
Controllers voice: "System Lock Off" If the correct password entered

Parameters:
P..P is the password information. This password can range from 1..15 digits depending on what the user entered with Command 004.

Defaults:
The password system is set-up for challenged passwords.

Notes:
- Please note the password if you change it. Serial can bypass the unlock sequence if specified. If you do not note the password table, the serial may be able to change the table if Command 004 is not locked on the serial port.

Error Codes:

(System wide errors are listed in front of the manual)

Response:

"Controller Lock Off" or "Controller Lock On"

006: Locking the Controller

This command locks the controllers access. Once the controller is locked the unlock sequence must be re-entered in order to gain access to locked commands.

<006>

Parameters:
There are no parameters for this command.

Defaults:
the controller defaults locked

Error Codes:

(System wide errors are listed in front of the manual)

Example 1:

The user is finished with programming and wants to re-lock the controller.

006 D or unkey

Response:
"Controller Lock On"

027: Rename DTMF Command Name

This command allows the user to rename commands using the 3 digit command number as the look-up indicator.

<027> *xxx y..y*

Parameters:
XXX is the command number that ranges from 000..215
Y..Y is the 1-6 digit command name
The command name can contain any of the 16 DTMF digits.
The command names can be up to 6 digits in length

Defaults:
The command names correspond to the command numbers.

Notes:
- It is important not to name 2 different command names the same name. If you do this the first command name matched will be executed. The controller scans from command number 000 to find a matching command name. If you rename 2 command names the same simply rename the later command name to a different name.

- The controller scans for name matches beginning with 6 digits down to single digit matches. When the controller finds a possible name match it compares the additional data that is present with the command name to what the controller expects that command names additional data needs. This matching sequence allows command names that are similar to be executed separately.

For example: A command name '#' and '#12 with data 13 14' will be executed differently. The controller will match '#' because it does not need additional data and will match'#12' with its command name because it needs 4 digits of additional data.

Error Codes:
E1 - Invalid command number. Number ranges from 000..215
E2 - Not enough data present
(System wide errors are listed in front of the manual)

Example 1:
I want to rename my Male time read '#054'

027 054 #054 D or unkey

Response:
"Command Number is <Command Name>"

028: Command Read Back by Command Number

This command allows the user to recall a command name using the command number as the look-up source. This is handy when the command name is not know. The command number never changes so it is therefore a constant that can always be used as a reference.

<028> *xxx*

Parameters:
XXX is the command number that ranges from 000..215

Defaults:
The command names correspond to the command numbers.

Error Codes:
E1 - Invalid command number. Number ranges from 000..215
E2 - Not enough data present
(System wide errors are listed in front of the manual)

Example 1:
I need to recall what I named my Male time read command code. The command number is 054.

028 054 D or unkey

Response:
"Command Number is <Command Name>"

029: Command Name Compare to Find Command Number

This command allows the user to recall a command number using the command name as the look-up source. This is handy when the command number is not know. The command number never changes so it is therefore a constant that can always be used as a reference.

<029> *x..x*

Parameters:
X..X is the command name

Defaults:
The command names correspond to the command numbers.

Error Codes:
E1 - Invalid command name.
(System wide errors are listed in front of the manual)

Example 1:
I need to recall what the command number is for my Male time read.

029 #054 D or unkey

Response:
"Command Number is <Command Name>"

030: Change First,Second,Third Command Name Digits

This command allows the user to change the first, second, and third digits of a group of command names. This command is used when a group of commands names needs a common part of the command name changed. This will not effect the command numbers (first 3 digits of the command name).

<030> *xxx yyy z..z*

Parameters:
XXX is the beginning command number that ranges from 000..215
YYY is the ending command number that ranges from 000..215
Z..Z is the digits to assigned to the group of commands.

Defaults:
The first 3 digits of these command names are not defined. All command names are 3 digits in length referenced by the command number.

Error Codes:

(System wide errors are listed in front of the manual)

Example 1:
I want to make all my commands begin with the DTMF digit 'C'

030 000 215 C D or unkey

Response:
"First command number is <Command Addition>, Second command number is <Command Addition>"

031: Group Assign DTMF Command Mask Assign

This command allows the user to assign a DTMF execution mask to a group of commands. Use of this command allows the control operator the ability to keep certain ports from executing certain commands and/or all commands.

<031> *xxx yyy z*

Parameters:
XXX is the beginning command number ranging from 000..215
YYY is the ending command number ranging from 000..215

Z is the audio routing variable used to allow access to certain commands

DTMF Allowed Execution of the Command	Number that corresponds to the device
Port 1	+1
Port 2	+2

(Z) Audio routing variable = (port1)+(port2)

Defaults:
All ports can execute all commands (Z=3)

Error Codes:
E1 - Digit Counters do not match. Check the number of digits entered for this command.
E2 - Invalid command number. Command numbers range from 000..215
E3 - Invalid audio routing variable. Variables range from 0..3
(System wide errors are listed in front of the manual)

Example 1:
I have a remote base on port 2..I do not want this radio to execute any DTMF commands.
(Z) Audio routing variable = 1(port1)+0(port2)

031 000 215 01 D or unkey

Response:
"First command number is <DTMF Mask>, Second command number is <DTMF Mask>"

032: Command Checks Value of DTMF Execution Register

This command checks the results of Command 31 on individual command numbers.

<032> *xxx*

Parameters:
XXX is the command number ranging from 000..215

Defaults:
All ports can execute all commands (Z=3)

Error Codes:
E1 - Invalid command number. Command numbers range from 000..215
(System wide errors are listed in front of the manual)

Example 1:
I can not execute the "Check cross-point" command 009. I need to see if I am enabled to execute that command.

032 009 D or unkey

Response:

DTMF Allowed Execution of the Command	Number that corresponds to the device
Port 1	+1
Port 2	+2

(Z) Audio routing variable = (port1)+(port2)

033: Group Assign Master Unlock Requirement for DTMF

This command allows the user to assign lock code requirements for a group of commands. This only effects the DTMF lock/unlock assignment. Serial lock assignments are programmed starting with Command 036.

To gain access to a locked command the controller must be unlocked. See Command 004,005, and 006 for unlock control.

<033> *xxx yyy z*

Parameters:
XXX is the beginning command number ranging from 000..215
YYY is the ending command number ranging from 000..215
Z is the control function
1 - requires an unlock before execution
0 - does not require an unlock before execution

Defaults:
All commands are unlocked

Notes:
- Command 005, the unlock command can never be locked. If it could be locked access to the controller could never be possible.

Error Codes:
E1 - Invalid command number. Command numbers range from 000..215
E2 - Invalid control variable. Variables range from 0..1
(System wide errors are listed in front of the manual)

Example 1:
I want all programming commands except macros, to require the unlock code entered.

033 000 141 1 D or unkey

Response:
"First command number is <ON/OFF>, Second command number is <ON/OFF>"

034: Individually Assign Unlock Requirement for DTMF

This command allows the user to assign lock code requirements for individual commands. This only effects the DTMF lock/unlock assignment. Serial lock assignments are programmed starting with Command 036.

To gain access to a locked command the controller must be unlocked. See Command 004,005, and 006 for unlock control.

<034> *xxx y*

Parameters:
XXX is the command number ranging from 000..215
Z is the control function
1 - requires an unlock before execution
0 - does not require an unlock before execution

Defaults:
All commands are unlocked

Notes:
- Command 005, the unlock command can never be locked. If it could be locked access to the controller could never be possible.

Error Codes:
E1 - Invalid command number. Command numbers range from 000..215
E2 - Invalid control variable. Variables range from 0..1
(System wide errors are listed in front of the manual)

Example 1:
I want to allow execution of 'Time-of-Day Reading'

034 055 0 D or unkey

Response:
"Command number is <ON/OFF>"

035: Recall DTMF Unlock Requirements on a Command

This command checks the results of Commands 33,34.

<035> *xxx*

Parameters:
XXX is the command number ranging from 000..215

Defaults:
All commands are unlocked

Notes:
- Command 005, the unlock command can never be locked. If it could be locked access to the controller could never be possible.

Error Codes:
E1 - Invalid command number. Command numbers range from 000..215
(System wide errors are listed in front of the manual)

Example 1:
I keep getting an Error 7 when I try to read the time-of-day clock, Command 055. Why??

035 055 D or unkey

The lock is enabled for this command. Execute Command 005 to unlock the controller then try to execute the command.

Response:
"Command number is <ON/OFF>"

036: Group Assign Master Unlock Requirement for Serial

This command allows the user to assign lock code requirements for a group of commands. This only effects the Serial lock/unlock assignment. DTMF lock assignments are programmed starting with Command 033.

To gain access to a locked command the controller must be unlocked. See Command 004,005, and 006 for unlock control.

<036> *xxx yyy z*

Parameters:
XXX is the beginning command number ranging from 000..215
YYY is the ending command number ranging from 000..215
Z is the control function

1 - requires an unlock before execution
0 - does not require an unlock before execution

Defaults:
All commands are unlocked

Notes:

- Command 005, the unlock command can never be locked. If it could be locked access to the controller could never be possible.

Error Codes:
E1 - Invalid command number. Command numbers range from 000..215
E2 - Invalid control variable. Variables range from 0..1
(System wide errors are listed in front of the manual)

Example 1:
I want all programming commands except macros, to require the unlock code entered.

036 000 141 1 D or unkey

Response:
"First command number is <ON/OFF>, Second command number is <ON/OFF>"

037: Individually Assign Unlock Requirement for Serial

This command allows the user to assign lock code requirements for individual commands. This only effects the Serial lock/unlock assignment. DTMF lock assignments are programmed starting with Command 036.

To gain access to a locked command the controller must be unlocked. See Command 004,005, and 006 for unlock control.

<037> *xxx y*

Parameters:
XXX is the command number ranging from 000..215
Z is the control function
1 - requires an unlock before execution
0 - does not require an unlock before execution

Defaults:
All commands are unlocked

Notes:
- Command 005, the unlock command can never be locked. If it could be locked access to the controller could never be possible.

Error Codes:
E1 - Invalid command number. Command numbers range from 000..215
E2 - Invalid control variable. Variables range from 0..1
(System wide errors are listed in front of the manual)

Example 1:
I want to allow execution of 'Time-of-Day Reading'

037 055 0 D or unkey

Response:
"Command number is <ON/OFF>"

038: Recall Serial Unlock Requirements on a Command

This command checks the results of Commands 33,34.

<038> *xxx*

Parameters:
XXX is the command number ranging from 000..215

Defaults:
All commands are unlocked

Notes:
- Command 005, the unlock command can never be locked. If it could be locked access to the controller could never be possible.

Error Codes:
E1 - Invalid command number. Command numbers range from 000..215
(System wide errors are listed in front of the manual)

Example 1:
I keep getting an Error 7 when I try to read the time-of-day clock, Command 055. Why??

037 055 D or unkey

The lock is enabled for this command. Execute Command 005 to unlock the controller then try to execute the command.

Response:
"Command number is <ON/OFF>"

040: User Forced Execution Digit Change

This command allows the changing of the forced execution digit. This digit forces the execution of the commands entered before the receiver drops. Uses of this digit is the shut-off a receiver when the COR is stuck open, a jammer needs to be shut-off, quicker access to commands, and the list goes on.

<040> *x*

Parameters:
X is the new DTMF forced execution digit

Defaults:
The forced execution digit is the 'D'

Notes:
- It is important not to define the forced execution digit to a commonly used DTMF digit. Once the DTMF digit is defined as being the forced execution digit, it can no longer be used for system wide applications. Typical DTMF digits used are '* A B C D'.

Error Codes:
(System wide errors are listed in front of the manual)

Example 1:
I need the EOF digit to be a '*' so I can use the 'D' in command names.

040 * D or unkey

Response:
"Condition Entered With A <Forced Execution Digit>'

041: Check the Forced Execution Digit

This command checks the current setting of the forced execution digit.

<041>

Parameters:
There are no parameters for this command

Defaults:
The forced execution digit defaults to a 'D'

Error Codes:
(System wide errors are listed in front of the manual)

Example 1:
I need to check the forced execution digit before I begin programming

041 D or unkey

* Note: The 'D' in the above example is the forced execution digit. If the digit is actually a '*' then the command entry would look like.

041 * or unkey

Response:
"Condition Entered With A <Forced Execution Digit>'

115: Assign the DTMF Decoder Priority

This command gives the controller the ability to assign highest priority to the DTMF decoder. When a port is assigned as highest priority, its activity determines where the DTMF decoder will be located for code input. Normally this port is "Port 5" the control receiver. This command is not discriminate. When the priority port is active, the decoder is changed to this port, regardless of data entry on the currently active port

<115> *x*

Parameters:
X is the radio port priority

DTMF Allowed Execution of the Command	Number that corresponds to the device
No Priority	0
Port 1	1
Port 2	2

Defaults:
(X) is set for the control receiver

Error Codes:
E1 - Invalid radio port. Number must range between 1..2
(System wide errors are listed in front of the manual)

Example 1:
I want Port 2 to become DTMF priority.

115 2 D or unkey

Response:
"Radio Select <Radio Port>"

Chapter 4 Examples

Example 4-1: Accessing Locked Commands when in Challenged Password Mode

The controller has a high security lock-out mode that keeps unwanted users from accessing certain commands. When the controller is un-locked, all commands can be accessed without security. This opens the programming of the controller up to anyone. Therefore the controller has the feature of locking access to any or all of the controllers commands. The only way to access these commands is by entering the correct unlock codes. Once the controller is unlocked open programming is again possible.

How to tell the controller to unlock:

The controllers unlock command is a challenging unlock code. When the user wants access to the locked commands, simply enter Command 005. This command will respond with the unlock code request. The voice message is 'Please Enter Code X X X X'. 'X X X X' refers to the numbers entered into the access code table (See Command 004). In order to unlock the controller the user must re-enter Command 005 followed by 'X X X X'. If the controller locates these codes correctly it will unlock the controller by speaking 'System Lock Off'. If the codes requested by the controller are incorrect, the controller will respond with the response 'System Lock On'. If you mess-up entering the codes simply execute Command 005 again and the controller will request another set of codes. The controller will never request the same codes twice in a row, and the code numbers will never be the same in the request. For example the controller will never request '1, 4, 4, 15' because there are 2-4's in the-4's in the same request.

For security the user can embed the requested unlock code in a string of garbage data up to 100 DTMF digits in length. If the controller requests the unlock code '1 5 A 3' the user can enter the sequence '1 5 A 3' or '1 2 8 5 4 1 5 A 3 4 6 1 2' and the controller will unlock programming. If you notice the correct unlock code is present in the 13 digit sequence, but surrounded by garbage digits.

Once programming is complete, the user can lock the controller using Command 006. If the user forgets to lock the controller, the System Un-Lock timer (See Command 050,051,052) will automatically lock the controller. The lock timer is reset after every command is executed without any errors.

Example 4-2: Renaming Commonly Used Commands

In order for the controller to handle your system existing codes, the RLC-1 has the ability of renaming the command names from 1..6 digits. The command names can contain any of the 16 DTMF digits except the forced execution digit. This digit defaults to the 'D' key. All command names default to their command number. Command numbers range from 000..215. All internal programming that handle any command names uses the command number as the command request. This insures the controller does not need to busy itself by handling the command name that can be as big as 6 digits.

For example:

In a macro I need to recall a voice message (Command 045). I have renamed this command name to 1234AA. Inside the macro I will use the command number (045) not the name of 1234AA.

Rules to follow when deciphering the command name maze:

1) Use the 3 digit command numbers when the controller executes the command
2) Use the DTMF command name when executing from any of the radio\patch ports.
3) When executing from the serial port, use the command numbers, not the command names

Default Command Names:

All command names are initialized to their command number out of initialization. For example to execute Command 045 you enter 045 out of initialization. All of the manual pages that describe the commands functions begin with the commands command number.

Example 4-3: Renaming Commands

In order for the controller to handle your system existing codes, the RLC-1 has the ability of renaming the command names from 1..6 digits. The command names can contain any of the 16 DTMF digits except the forced execution digit. This digit defaults to the 'D' key. All command names default to their command number. Command numbers range from 000..215. All internal programming that handle any command names uses the command number as the command request. This insures the controller does not need to busy itself by handling the command name that can be as big as 6 digits.

Renaming commands using Command 027:
Command 027 allows the user to rename any command number to a unique command name. The format of the command:

027 XXX #..# D or unkey

Where 027 is the default command name of command 027
XXX is the command number needing the new command name
#..# is the new command name that ranges from 1 to 6 digits

Example: I want to recall my controller time using the code #83

1) Recall the time uses command number 055
2) Execute command 027

The format of the command:

027 055 #83 D or unkey

Where 027 is the default command name of command 027
055 is the recall time command
#83 is the new command name

Exceptions:

1) Command names can not contain the forced execution digit.
Forced execution digit defaults to the 'D' key

If you need to change the forced execution digit, do it before you name any commands that will contain the new forced execution digit.

2) Duplicate command names are not allowed

If you duplicate command names the controller will execute the first name that it comes to. The second instance will never be executed except by the serial port, and internal commands. If you accidentally name two commands the same name simply rename the duplicate command to another name using command 027.

Recalling command names is accomplished using commands 028 and 029

028 recalls the command name using the command number as the key

028 XXX D or unkey ; recalls command name of command number 'XXX'

029 recalls the command number using the command name as the key

029 #..# D or unkey ; recalls command number of command name '#..#'

Example 4-4: Assigning DTMF, Un-Lock codes, Serial masks

The RLC-1 supports assignment of several user options to determine who can execute commands and from what source. The 3 types of masks:

- DTMF execution mask: This mask is used to determine what ports can execute what commands. If you do not want certain ports from executing commands. Command 031 is provided to assign DTMF masks to a group of command numbers. All commands default to execution from all ports.

Format: Assign DTMF mask
031 XXX YYY # D or unkey
Where 'XXX' is the first command number
'YYY' is the second command number
'#' is the execution mask (See Command 031)

If you only want to assign a DTMF mask to 1 command, then enter that command number for both 'XXX' and 'YYY'.

Example: I want port 2 no DTMF access to any commands
1) Calculate the mask (See Command 031)
- The mask value calculated: 1 + 0 = 1
2) Execute command 031:
- 031 000 215 1 D or unkey ; Allows DTMF execution from all ports except port 2

To check what DTMF execution mask is assigned to a command, see command 032.

- Unlock codes for DTMF access: This mask is used to determine what commands executed from DTMF can access programming commands only when the controller is unlocked. When the unlock code is assigned, the user must execute Command 005 before these commands can be executed. All commands default unlocked (No command 005 needed).

Format: Assign Unlock code for a group of DTMF accessed commands
033 XXX YYY # D or unkey
Where 'XXX' is the first command number
'YYY' is the second command number
'#' is the lock mask 1=lock, 0=unlock

Format: Assign Unlock code for an individual DTMF accessed command
034 XXX # D or unkey
Where 'XXX' is the command number
'#' is the lock mask 1=lock, 0=unlock

To check what unlock code is assigned to a command, see command 035.

Example: I want all commands from 000..142, 144,145 and 150..170 to require the unlock code be entered before accessing those commands

1) Execute command 033 for commands 000..142:
   - 033 000 142 1 D or unkey ; Require unlock code
2) Execute command 034 for commands 143
   - 034 143 0 D or unkey ; Command unlocked
3) Execute command 033 for commands 144..145:
   - 033 144 145 1 D or unkey ; Require unlock code
4) Execute command 033 for commands 146..149:
   - 033 146 149 0 D or unkey ; Commands unlocked
5) Execute command 033 for commands 150..170:
   - 033 150 170 1 D or unkey ; Require unlock code

This batch of commands only allows certain commands to be executed by the user. All other commands require the unlock code entered. Command 005 can never be locked. If this command were locked, the controller could never be unlocked.

- Unlock codes for serial port access: This mask is used to determine what commands executed only from the serial port can access programming commands only when the controller is unlocked.

Format: Assign Unlock code for a group of serial port accessed commands
   036 XXX YYY # D or unkey
      Where 'XXX' is the first command number
         'YYY' is the second command number
         '#' is the lock mask 1=lock, 0=unlock

Format: Assign Unlock code for an individual serial accessed command
   037 XXX # D or unkey
      Where 'XXX' is the command number
         '#' is the lock mask 1=lock, 0=unlock

To check what serial unlock code is assigned to a command, see command 038.

Example: I want all commands execute from the serial port to require the unlock code be entered before accessing those comands

1) Execute command 036 for commands 000..215:
   - 036 000 215 1 D or unkey ; Require unlock code

This batch of commands only allows certain commands to be executed by the user. All other commands require the unlock code entered. Command 005 can never be locked. If this command were locked, the controller could never be locked.

Example 4-5: Changing the <Forced Execution> Digit

The controller supports a special DTMF digit called the forced execution digit. This digit is special in the case that it forces the controller to execute the entered digits when this digit is entered. The controller has 3 ways of causing commands to be executed.

1) Receiver drops and causes the DTMF digits, if any, to be executed
2) Timed execution. After the DTMF digits are entered, and if the receiver does not unkey before the timer assigned to the timed execution expires, the DTMF data is executed.
3) Forced execution digit is received. Upon receipt of this digit, the controller will execute the entered digits.

The forced execution digit defaults to the 'D' key. Because of the command executer the controller supports, and because the 'D' digit is not used very often, this digit as the enter digit. Other controllers, and earlier versions of software for this controller used the '*' as the forced execution digit. With the new executer on the controller, the '*' is defined for other purposes on the controller. Autopatch access begins with the '*'.

'D' can not be used in any functions on the controller except in the pre-access system.

When choosing the forced execution digit, the user must keep in mind that the digit can not be used for any other function in the controller. If you are use to the '*' as this digit, simply include the '*' in your command name.

Reverse autopatch access can not use the 'D' unless you have a 16 digit phone system. If you do not then see Command 023 to enable timed execution. This seems to work well with the phone system.

Changing the forced execution digit.

1) Verify you do not use this digit in existing command names
2) Execute Command 040 followed by the new Forced digit

    040 X D or unkey

        Where 'X' is you new forced execution digit

    Response "Command Entered With A 'X' "

The controller defaults the forced execution digit as a 'D'

Chapter 5: Messages, Tones and Responses

This chapter deals with the programming, setup and sending of system voice, cw, and tone messages.

042: Generate a Tone Sequence Out Selected Ports

This command is what generates tone sequences for courtesy beeps, paging tones, DTMF regeneration and any function that uses a tone generated tone sequence.

Custom developed tones

<042> *xxxx yyyy ddd ppp*

Parameters:
XXXX is the frequency for Tone 1
YYYY is the frequency for Tone 2
DDD is the length of the tone sequence in 10mS increments
PPP is the length of the delay between the next tone sequence in 10mS increments

Pre-Programmed tones

<042> *xx*

Parameters:
XX is the pre-programmed tone sequence (See Below)

Tone Name	Number	Tone 1	Tone 2	Length	Pause
Bumble Bee	00	330	0000	100mS	0mS
	00 cont.	500	0000	100mS	0mS
	00 cont.	660	0000	100mS	0mS
Yellow Jacket	01	330	0000	50mS	0mS
	01 cont.	500	0000	50mS	0mS
	01 cont.	660	0000	50mS	0mS
Shooting Star	02	881	0000	100mS	0mS
	02 cont.	881	0000	100mS	0mS
	02 cont.	540	0000	100mS	0mS
Comet	03	540	0000	100mS	0mS
	03 cont.	500	0000	100mS	0mS
	03 cont.	750	0000	100mS	0mS

Stardust	04	750	0000	120mS	0mS
	04 cont.	881	0000	80mS	0mS
	04 cont.	1202	881	80mS	0mS
Duncecap	05	440	500	200mS	0mS
	05 cont.	440	350	200mS	0mS
Dial Tone	06	440	350	100mS	100mS
Low-High Beep	07	500	0000	100mS	0mS
	07 cont.	667	0000	100mS	0mS
High-Low Beep	08	667	0000	100mS	0mS
	08 cont.	500	0000	100mS	0mS
Cover Tone	09	1000	0000	200mS	300mS
Audible Ring Tone	10	440	480	400mS	400mS

Notes:

- The tones are routed to the port that executed them. When a courtesy beep is requested from the event table (See Commands 63,64,65) the controller knows where to route the tones.

Error Codes:

E1 - Not enough data entered
E2 - Invalid pre-programmed tone slot
(System wide errors are listed in front of the manual)

Tone Levels:

Refer to Command 116, event 8 to adjust the pre-programmed tone level (short entry)
Refer to Command 116, event 7 to adjust the custom tone sequence tone level (long entry)

Example 1:

I want to generate a pre-programmed beep #10

042 10 D or unkey

Response:

There is no voice response for this command

043: Generate a CW Message Out Selected Ports

This command generates the CW messages used by the controller.

<043> *xx..xx*

Parameters:
XX..XX is the CW code table

CW	XX	.	CW	XX	.	CW	XX	.	CW	XX	.	CW	XX
0	0	.	A	10	.	K	20	.	U	30	.	SPACE	40
1	1	.	B	11	.	L	21	.	V	31	.	PAUSE	41
2	2	.	C	12	.	M	22	.	W	32	.	Special	42
3	3	.	D	13	.	N	23	.	X	33	.		
4	4	.	E	14	.	O	24	.	Y	34	.		
5	5	.	F	15	.	P	25	.	Z	35	.		
6	6	.	G	16	.	Q	26	.	/	36	.		
7	7	.	H	17	.	R	27	.	0	37	.		
8	8	.	I	18	.	S	28	.	?	38	.		
9	9	.	J	19	.	T	29	.	AR	39	.		

Defaults:
CW speed defaults to 20 WPM
CW Frequency defaults to 1000HZ
Refer to Command 116, event 0 to adjust the CW tone level

CW Character 42 is a special case character that pauses the CW message from being sent. See voice word 603 for a detailed explanation.

Error Codes:
E1 - To much CW data
E2 - Invalid CW Character

(System wide errors are listed in front of the manual)

Example 1:
I want to generate a CW message 'KF7FW/R'

043 20 15 07 15 32 36 27 D or unkey

Response:
There is no voice response for this command

044: Generate a DTMF Sequence Out a Selected Port

This command allows the re-generation of DTMF tones down selected ports. With this command the user can send a DTMF data burst of up to 20 digits down any of the ports.

<044> *x yy..yy*

Parameters:
XX is the audio routing variable

DTMF Allowed Execution of the Command	Number that corresponds to the device
Port 1	+1
Port 2	+2

(X) Audio routing variable = (port1)+(port2)

YY is the DTMF digits

DTMF Digit	Number Entered	DTMF Digit	Number Entered
0	00	9	09
1	01	A	10
2	02	B	11
3	03	C	12
4	04	D	13
5	05	D	14
6	06	#	15
7	07	Pause	16
8	08		

Defaults:
DTMF length = 100mS
DTMF pause = 100mS

Notes:

- When re-generating DTMF the controllers tone 1 and tone 2 need to adjusted correctly to provide to correct 'twist'. Most DTMF decoders are not picky about the twist factor. It is a good idea to adjust both tones to about the same level.

- DTMF re-generation length and pause is programmed with the timer commands (See Commands 50,51,52) for timer numbers.

DTMF Generate Level

Refer to Command 116, event 5 to adjust the DTMF tone level. It is important to note that you can select different levels for the 2 DTMF tones. This allows the user to program “Twist” into the DTMF being generated.

Error Codes:

E1 - To many DTMF digits requested
E2 - Invalid DTMF digit. Digits must be between 00..16
(System wide errors are listed in front of the manual)

Example 1:

I want to send a DTMF string 'pause, pause, pause 96 C000 * ' down port 2

```
044 2 16 16 16 09 06 12 00 00 00 14 D or unkey
```

Response:

DTMF digits is the only response

045: Generate a Voice Message

This command allows the generation of voice messages. These messages can be either impolite (Can not be interrupted), polite (Can be interrupted and the message is canceled) or polite with a message sent (Can be interrupted and the message is canceled, when the message is canceled an event in the event table is requested. This event can then generate a CW message or another voice message if needed). See Appendix C for the voice word table.

<045> *xxx..xxx*

Parameters:
XXX..XXX are the voice words for speaking.

Notes:
There two special words that effect how a voice message is spoken.

- Word 733: Indicates a polite message that when interrupted will cancel the voice message
- Word 734: Is the same as word 733 except when it is interrupted it requests an event from the event table. The user could send a CW message when the voice is interrupted.

Error Codes:
E1 - To much or to little data entered
E2 - Incorrect voice word. See Appendix C for voice words
(System wide errors are listed in front of the manual)

Example 1:
I want to speak the message
"At <Male Time> You Are On The Repeater, <Good MAE>"

AT	086
<Male Time>	701
You	539
Are	048
On	358
The	476
Repeater	411
Pause	587
<Good MAF>	700

045 086 701 539 048 358 476 411 587 700 D or unkey

Response:
Response is what you typed in.

046: Delete a Message Slot

This command allows the deletion of certain message slots. This is useful when a message is no longer needed. When the message is deleted, there will be no key-ups or delays when the controller requests that message.

<046> *xx*

Parameters:
XX is the message slot number. This number ranges from 01..33

Notes:
- Once a message is deleted you must re-program the message. There is no way to undelete the message slot once it is deleted.

Error Codes:
E1 - Invalid message slot
(System wide errors are listed in front of the manual)

Example 1:
I need to delete message slot 15. It is no longer used

046 15 D or unkey

Response:
"Cancel <Message slot number>"

047: DTMF Keypad Message Generate

This command allows the user to generate a voice message as a keypad test. Up to 20 keys can be entered to generate a voice message. The controller will respond with a voice message that is equivalent to the DTMF entered.

<047> *x..x*

Parameters:

X..X are the DTMF digits entered

Defaults:

There are no defaults for this command

Notes:

- The "Forced Execution Digit" will never be spoken. All other 15 digits will be spoken

Error Codes:

E1 - To much or to little data entered

(System wide errors are listed in front of the manual)

Example 1:

I want to test my keypads DTMF digits

047 1 2 3 4 5 6 7 8 9 0 A B C D # D or unkey

Response:

"<DTMF Digits Entered>"

048: Recall a Message Slot 00..33

This command allows the recalling of pre-programmed voice or cw messages. If the slot is empty you will get an error.

<048> *xx*

Parameters:
XX is the message slot number. This number ranges from 01..33

Defaults:
All message slots are empty

Error Codes:
E1 - Invalid message slot
E2 - Message slot is empty
(System wide errors are listed in front of the manual)

Example 1:
I want to check message slot 14 for its contents

048 14 D or unkey

Response:
"Voice or CW data if the message is programmed otherwise Error 2"

049: Program a Message Slot

This command allows you to program the message slots with voice or cw messages. Slots 51..58 are special analog faceplate slots but can be used for small messages if not used in the analog application.

<049> *xx y zzz..zzz*

Parameters:

XX is the message slot number. This number ranges from 01..33

Message Slot	Length	Description
00	...	Software Version
01..25	20 words	User Message Slots
26..33	3 words	Analog Faceplate Slots

Y is the message type variable:

0 - CW Message
1 - Voice Message

- ZZ are the CW characters from the Code Table (See Page 5-4) if message type 0

Defaults:

All message slots are empty

Error Codes:

E1 - To much or to little data
E2 - Invalid message type. Number must be between 0..2
E3 - Invalid message slot

(System wide errors are listed in front of the manual)

Example 1:

I want to store the voice message in slot 01
"At <Male Time> You Are On The Repeater, <Good MAE>"

AT	086	<Time>	701	You	539	Are	048	On	358
The	476	Repeater	411	Pause	587	<Good MAF>			700

049 01 1 086 701 539 048 358 476 411 587 700 D or unkey

Response:

Response is what you typed in.

111: Set Up the CW Speed

This command allows the setting of the CW frequency speed. The speed is entered in words-per-minute. The speed can range from 01..35.

<111> *xx*

Parameters:
XX is the CW speed. This number ranges from 01..35

Defaults:
The CW speed defaults to 20 WPM

Notes:
- The FCC states the CW speed must be 20 WPM or less

Error Codes:
E1 - Invalid speed.

(System wide errors are listed in front of the manual)

Example 1:
I want to slow my CW down to 13 WPM.

111 13 D or unkey

Response:
"Code Speed At <Speed>"

112: Set Up the CW Tone Frequency

This command sets up the CW's 2-tone frequencies. There are 2 tone frequencies available for CW tones. If the user wants a louder CW tone than normal courtesy beeps simply set both tones to the same CW frequency. This will give you a louder CW tone.

<112> *xxxx yyyy*

Parameters:
XXXX is the frequency 1 for tone 1 (See Appendix B)
YYYY is the frequency 2 for tone 2 (See Appendix B)

Defaults:
XXXX is 1000HZ
YYYY is 0000HZ

CW tone level
Refer to Command 116, event 0 to adjust the CW tone level

Error Codes:

(System wide errors are listed in front of the manual)

Example 1:
I want a louder CW tone. The tone needs to be 1064HZ. (0937 counts)

112 1064 1064 D or unkey

Response:
"Code Frequency Is <Tone1> and <Tone2>"

113: Program a 2-Tone Pager Slot

This command programs the controllers 2-tone paging slots. These tones are standard tone pairs used with common pagers.

<113> *ss bbaa ddcc e r*

Parameters:
SS is the pager slot. This number ranges from 01..19
AA is the column offset for the first tone (Refer to Tone group offset tables)
BB is the row offset for the first tone (Refer to Tone group offset tables)
CC is the column offset for the second tone (Refer to Tone group offset tables)
DD is the row offset for the second tone (Refer to Tone group offset tables)
E is the delay parameters for this tone sequence

Tone Groups for Column and Row Offset

Group->	TONE #	MOTO1	MOTO2	MOTO3	MOTO4	MOTO5	MOTO6	MOTOA
ROW	COL .->	01	02	03	04	05	06	07
00	0	330.5	569.1	1092.4	321.7	553.9	1122.5	358.9
01	1	349.0	600.9	288.5	339.6	584.8	1153.4	398.1
02	2	368.5	634.5	296.5	358.6	617.4	1185.2	441.6
03	3	389.0	669.9	304.7	378.6	651.9	1217.8	489.8
04	4	410.8	707.3	313.0	399.8	688.3	1251.4	543.3
05	5	433.7	746.8	953.7	422.1	726.8	1285.8	602.6
06	6	457.9	788.5	979.9	445.7	767.4	1321.1	668.3
07	7	483.5	832.5	1006.9	470.5	810.2	1357.6	741.3
08	8	510.5	879.0	1034.7	496.8	855.5	1395.0	822.2
09	9	539.0	928.1	1063.2	524.6	903.2	1433.4	912.0
10	A	569.1	979.9	569.1	569.1	979.9	979.9	979.9

Tone Groups for Column and Row Offset cont...

Group->	TONE #	MOTOB	MOTOZ	GE A'	GE B'	GE C'	MOTO10	MOTO11
ROW	COL . >	08	09	10	11	12	13	14
00	0	371.5	346.0	682.5	652.5	667.5	1472.9	1930.2
01	1	412.1	384.6	592.5	607.5	712.5	1513.5	1989.0
02	2	457.1	426.6	757.5	787.5	772.5	1555.2	2043.8
03	3	507.0	473.2	802.5	832.5	817.5	1598.0	2094.5
04	4	562.3	524.8	847.5	877.5	862.5	1642.0	2155.6
05	5	623.7	582.1	892.5	922.5	907.5	1687.2	2212.2
06	6	691.8	645.7	937.5	967.5	952.5	1733.7	2271.7
07	7	767.4	716.1	547.5	517.5	532.5	1781.5	2334.6
08	8	851.1	794.3	727.5	562.5	577.5	1830.5	2401.0
09	9	944.1	881.0	637.5	697.5	622.5	1881.0	2468.2
10	A	979.9	979.9	742.5	742.5	742.5	.....	.....

E is the delay parameters for this tone sequence

Sequence	1st Tone	Gap	2nd Tone	Pager Group
1	1.0 Sec	0.0 Sec	3.0 Sec	GE/MOT TN&VC
2	0.4 Sec	0.0 Sec	0.8 Sec	Moto Tone Only
3	1.0 Sec	0.0 Sec	3.0 Sec	NEC-B
4	1.0 Sec	0.25 Sec	3.0 Sec	NEC-A
5	1.0 Sec	0.0 Sec	1.0 Sec	NEC-C
6	0.4 Sec	0.0 Sec	0.8 Sec	NEC-M
7	0.5 Sec	0.0 Sec	0.5 Sec	NEC-L
8	0.4 Sec	0.0 Sec	0.4 Sec	NEC-D

R is the audio routing variable

DTMF Allowed Execution of the Command	Number that corresponds to the device
Port 1	+1
Port 2	+2

(R) Audio routing variable = (port1)+(port2)

Defaults:
All slots are off or undefined

Pager tone level
Refer to Command 116, event 1 to adjust the Paging tone level

Error Codes:
E1 - Number input is to large
E2 - Number input is to small
E3 - Invalid pager slot. Number must be between 01..19
(System wide errors are listed in front of the manual)

Example 1:
I need to store a tone sequence slot 01, row 08, col. 01, row 10, col. 05, delay 1, route port 1

```
113 01 08 01 10 05 1 1 D or unkey
```

Response:
"Select <slot number> Programming"

114: Recall the 2-Tone Paging Slot 01..20

This command recalls the 2-tone slots programmed in Command 113.

<114> ss

Parameters:
SS is the pager slot. This number ranges from 01..19

Defaults:
All pager slots are disabled or unto defined

Error Codes:
E1 - Invalid pager slot. Number must be between 01..19
(System wide errors are listed in front of the manual)

Example 1:
I stored a tone sequence slot 01, row 08, col. 01, row 10, col. 05, delay 1, route port 1

114 01 D or unkey

Response:
"Tone sequence sent"

118: Program a Voice Message Delay for the Link Ports

This command allows a delay using the voice word ‘pause’ to be inserted on voice messages sent out link ports. This is useful when long link systems request voice messages from the controller. The delay allows the receiver and transmitters to all become active before the voice response begins. If the voice delay is set to zero cancels both the repeater ports delay and the link ports delay.

<118> dd

Parameters:
DD is the voice message delay. This number ranges from 00..29

Defaults:
Delay set to 05 (2 second delay)

Error Codes:
E1 - Number to large. Number must be between 00..29
(System wide errors are listed in front of the manual)

Example 1:
I want to cancel the delay present on voice message.

118 00 D or unkey

Response:
"Number Entered”

Chapter 5 Examples

Example 5-1: Generating a Custom Courtesy Beep

A courtesy beep on the controller is an event that is requested after certain timers have expired. Once these timers have expired the controller fetches the courtesy beep event for the portthat requested it. A courtesy beep event does not always have to be a tone sequence. The event can be anything from a command executed to a digital voice recorded message. Most users simply will use either the pre-programmed beep sequences (See Command 042). If one of the pre-programmed beeps does not meet your needs, then you can develop your own sequence. This involves calling a macro command from the event table.

The event table contains the events that are assigned to the courtesy beeps. Events 016..020 are the events for all 5 ports courtesy beeps.

Example: Develop a 3 beep sequence for Port 1's courtesy beep
1) Use Macro #01 for this example

2) Decide what each beep sequence will sound like
- Beep sequence 1: Tone 1:1000hz, 1200hz, 120mS long, 10mS delay
- Beep sequence 2: Tone 1:1200hz, 1400hz, 80mS long, 10mS delay
- Beep sequence 3: Tone 1:0600hz, 0800hz, 80mS long, 10mS delay

3) The format of Command 042
- 042 (tone count 1)(tone count 2)(length of tone 10mS)(length of delay 10mS)
- lengths: tone counts are 4 digits, lengths are 3 digits

4) Erase macro #01 using Command 127
- 127 01 D or unkey

5) Program macro #01 using Command 130
- 130 01 042 1000 1200 012 001 D or unkey ; Programs Beep sequence 1
- 130 01 042 1200 1400 008 001 D or unkey ; Programs Beep sequence 2
- 130 01 042 0600 0800 008 001 D or unkey ; Programs Beep sequence 3

7) Assign courtesy beep for port 1 (Event 011) to call macro #01 (Command 141)
- 064 011 2 141 6 D or unkey

This command assigns event (011) execute a command type (2) executes command number (141) and routes the response to all connected repeater ports. Once the event is programmed the controller enables execution of the sequence.

Example 5-2: Building Port 1's ID's

The controllers ID's are similar to the above courtesy beep example. An ID sequence is again an event in the table of events. The ID events begin with the following events:

Event 001 - Port 1 Initial ID. This event is requested when the Initial ID timer has expired

The following pending ID's are cycled through 1,2,3..1,2,3. When the pending ID timer expires, and there is activity the controller fetches one of the 3 ID's.
Event 002 - Port 1 Pending ID #1
Event 003 - Port 1 Pending ID #2
Event 004 - Port 1 Pending ID #3

Event 005 - Port 1 Forced ID. This ID is sent when the ID wait timer expires and the controller is forced to send an ID for legal purposes.

Refer to Chapter 6 for system timers.

I want to have a voice Initial ID and CW pending ID's.
- Voice ID: Welcome to the K F 7 F W Repeater <Pause> Thank you for Identifying
- CW ID's: K F 7 F W / R

Voice ID will be message slot #01. CW ID will be message slot #02 (See Command 048,049)

1) Look-up to Voice words (See Appendix C)
   - Welcome (526), To (002), The (476), K(041), F(036), 7(007), F(036), W(053), Repeater (411), Pause (587), Pause (587), Thank you (472), For (004), Identify (253), 'ing(548).
2) Look-up the CW words (See Command 043)
   - K (20), F (15), 7 (07), F (15), W (32), / (36), R (27)
3) Program message slot #01 as a voice message (See Command 049)
   - 049 01 1 526 002 476 041 036 007 036 053 411 587 587 472 004 253 548 D or unkey
4) Program message slot #02 as a CW message (See Command 049)
   - 049 02 0 20 15 07 15 32 36 27 D or unkey
5) Assign the Initial ID event to call message slot #01
   - 064 001 1 001 1 D or unkey
   Where (001) is the event number, (1) is the event type, (001) is message slot 01, (1) routes the message only to port 1.
6) Assign the Pending ID events to call message slot #02
   - 064 002 1 002 1 D or unkey ; Pending ID #1
   - 064 003 1 002 1 D or unkey ; Pending ID #2
   - 064 004 1 002 1 D or unkey ; Pending ID #3
   - 064 005 1 002 1 D or unkey ; Forced ID

Your ID structure is now ready for Port 1. Follow the same rules for you other ports.

Chapter 6 System Timers

This command deals with the programming, recalling and re-starting of the several system timers

050: Recall a Timer Slot

This command allows the user to recall the contents of each timer slot.

<050> *xx*

Parameters:
XX is the timer slot number

Timer #	Resolution	Default	Definition
00	10mS	200 (2 seconds)	Port 1 Hang Timer
01	10mS	200 (2 seconds)	Port 2 Hang Timer
02	10 Sec.	018 (3 Minute)	Port 1 Time-Out Timer
03	10 Sec.	018 (3 Minute)	Port 2 Time-Out Timer
04	10 Sec.	060 (10 Minute)	Port 1 Initial ID Timer
05	10 Sec.	060 (10 Minute)	Port 2 Initial ID Timer
06	10 Sec.	059 (9.90 Minute)	Port 1 Pending ID Timer
07	10 Sec.	059 (9.90 Minute)	Port 2 Pending ID Timer
08	10 Sec.	003 (30 Seconds)	Port 1 ID Wait Timer
09	10 Sec.	003 (30 Seconds)	Port 2 ID Wait Timer
10	10mS	100 (1 Second)	Port 1 Courtesy Beep Timer
11	10mS	100 (1 Second)	Port 2 Courtesy Beep Timer
12	10mS	100 (1 Second)	Port 1 Kerchunk Filter Timer
13	10mS	100 (1 Second)	Port 2 Kerchunk Filter Timer
14	10mS	005 (50mS)	DTMF Mute Delay Start Timer
15	1 Sec.	300 (5 minutes)	User 1 Timer
16	1 Sec.	300 (5 minutes)	User 2 Timer
17	1 Sec.	300 (5 minutes)	User 3 Timer
18	1 Sec.	300 (5 minutes)	User 4 Timer
19	1 Sec.	300 (5 minutes)	User 5 Timer

Timer #	Resolution	Default	Definition
20	10mS	010 (100mS)	DTMF Generate Length
21	10mS	010 (100mS)	DTMF Pause Length
22	10mS	500 (5 Seconds)	DTMF Scanner Timer
23	10ms	50mS	DTMF Decoder Delay Timer
24	10mS	200 (2 Seconds)	DTMF Mute Timer
25	10 Sec.	030 (5 Minutes)	System Unlock Timer
26	10mS	100 (1 Second)	RBI-1 Send Timer
27	10mS	300 (3 Seconds)	Pre-Access Tone Length Timer
28	10mS	800 (8 Seconds)	Pre-Access Timer
29	10mS	040 (400mS)	Tone Delay Start Timer
30	10mS	400(4 Second)	Long Tone Zero Timer
31	10mS	050 (500mS)	CW Delay Start Timer
32	10mS	200 (2 Sec.)	DTMF Timed Execution Timer

Error Codes:
E1 - Invalid timer number

(System wide errors are listed in front of the manual)

Example 1:
I need to check the value of the DTMF mute delay start timer.

```
050 23 D or unkey
```

Response:
Voice '<Slot Number> is <Time in the slot>'

051: Start a Timer Slot

This command re-starts a timer that is accessed from the timer table listed in Command 050.

<051> *xx*

Parameters:
XX is the timer slot number listed in Command 050.

Defaults:
Defaults are listed in Command 050.

Error Codes:
E1 - Invalid timer slot

(System wide errors are listed in front of the manual)

Example 1:
I just programmed the time-out timer on Port 1 to 3 minutes from 10 minutes. I need to restart it to take the new value.

051 02 D or unkey

Response:
Voice '<Slot Number> is <Time in the slot>'

052: Program a Timer Slot

This command allows the programming of the system timer slots. Each timer slot can accept 3 digits of user input ranging from 000..999. Each timer has its own resolution which is listed in the timer table in Command 050.

<052> *xx yyy*

Parameters:
XX is the timer slot number listed in Command 050.
YYY is the timer value that ranges from 000..999.
- Timer resolution is listed in Command 050.

Defaults:
Defaults are listed in Command 050.

Error Codes:
E1 - Invalid timer slot
(System wide errors are listed in front of the manual)

Notes:
- After you program a timer slot the old value is still in the timer system. You need to re-start the timer using Command 051 in order for the new value to take place.

Example 1:
I need to program the time-out timer on Port 1 to 3 minutes from 10 minutes.

052 02 018 D or unkey

Response:
Voice '<Slot Number> is <Time in the slot>'

066: Start a User Timer

This command allows the user to start a user timer when an event occurs. This command is usually used in conjunction with the event tables. This user timer value is programmed using Command 050,051,052.

<066> *x..x*

Parameters:
X..X are the user timers. These numbers must be between 1..5
- You can start several timers at once by entering all the timers in 1 sequence

Defaults:
All timers are off

Notes:
- Refer to the event table for user timer events to be executed when the timers expire

Error Codes:
E1 - Invalid user timer slot
(System wide errors are listed in front of the manual)

Example 1:
I want to start user timer 1,3,5.

066 1 3 5 D or unkey

Response:
"Timer <Timer Number> Start"

067: Stop a User Timer

This command allows the user to stop a user timer when an event occurs. This command is usually used in conjunction with the event tables. This user timer value is programmed using Command 050,051,052.

<067> *x..x*

Parameters:
X..X are the user timers. These numbers must be between 1..5
- You can stop several timers at once by entering all the timers in 1 sequence

Defaults:
All timers are off

Notes:
- Refer to the event table for user timer events to be executed when the timers expire

Error Codes:
E1 - Invalid user timer slot
(System wide errors are listed in front of the manual)

Example 1:
I want to stop user timer 2,4.

067 2 4 D or unkey

Response:
"Timer <Timer Number> Stop"

023: Control DTMF Timed Execution

This command allows the user to enable or disable the DTMF timed execution function. When this function is enabled, the controller will automatically execute the entered DTMF digits. Each time a DTMF digit is entered the execution timer is restarted. This function is mainly used in conjunction with the reverse autopatch. When this function is disabled, only carrier drop or forced execution digit will execute commands.

<023> X

Parameters:
X is the control variable
0 - disables timed execution
1 - enables timed execution

Defaults:
Timed execution is disabled

Notes:
- Refer to Command 050,051,052 for programming the execution timers length

Error Codes:
E1 - Invalid mode requested. This number must range between 0..1
(System wide errors are listed in front of the manual)

Example 1:
I want to enable DTMF timed execution

023 1 D or unkey

Response:
"DTMF Execute <ON\OFF>"

Examples for Chapter 6

Example 6-1: Using a User timer to Auto-Disconnect a Port

It is a common request to have the controller auto-disconnect a port after activity on that port PTT is been inactive for a certain time period. We will use 2 macros, 1 user timer, and 4 events to make this task work. For the example I will use port 2 to be turned off after lack of activity.

1) Set-up user timer #1 for 5 minutes
- 052 15 300 D or unkey ; 300 * 1 second = 5 minutes

2) Set-up User event #1 to call Macro #02
- 064 070 2 142 1 D or unkey ; User #1 event calls macro #01

Where (070) is the event number, (2) is the event type, (142) is the command name, (1) is where to route the response when executed.

3) Set-up Port 2's PTT just went active to reset timer with macro #03
- 064 040 2 143 1 D or unkey ; Port 2's PTT calls macro #03

Where (040) is the event number, (2) is the event type, (143) is the command name, (1) is where to route the response when executed.

4) Set-up Port 2's PTT just went inactive to reset timer with macro #03
- 064 068 2 143 1 D or unkey ; Port 2's PTT calls macro #03

Where (068) is the event number, (2) is the event type, (143) is the command name, (1) is where to route the response when executed.

5) Use Macro #01 as the Port 1-Port 2 On command
- 127 01 D or unkey ; Clear Macro 01's contents
- 130 01 000 1 2 D or unkey ; Connect port 1 to port 2
- 130 01 131 D or unkey ; Cancel all responses following this command
- 130 01 065 070 1 D or unkey ; Enable User Timer #1's Event
- 130 01 065 040 1 D or unkey ; Enable Port 2 PTT Active reset User Timer
- 130 01 065 069 1 D or unkey ; Enable Port 2 on PTT Inactive reset User Timer

6) User Macro #02 as the Port1-Port 2 Off command
- 127 02 D or unkey ; Clear Macro 02's contents
- 130 02 002 1 2 D or unkey ; Disconnect port 1 from port 2
- 130 02 131 D or unkey ; Cancel all responses following this command
- 130 02 065 070 0 D or unkey ; Disable User Timer #1's Event
- 130 02 065 040 0 D or unkey ; Disable Port 2 PTT Active reset User Timer
- 130 02 065 069 0 D or unkey ; Disable Port 2 PTT Inactive reset User Timer

7) User Macro #03 to reset the user timer
- 127 03 D or unkey ; Clear Macro 03's contents
- 130 03 131 D or unkey ; Cancel all responses following this command
- 130 03 066 1 D or unkey ; Start User Timer #1

This example lets the PTT on the watched port call a command that resets the watch timer both when the PTT goes active and when the PTT goes inactive. This insures a correct 'lack of activity' time will be insured.

When the user enables the port 1-port 2 connection the macro does a variety of tasks.
1) Connects the 2 ports together
2) Enables the User timer event
3) Enables the PTT On event
4) Enables the PTT Off event

When the user disables the port 1-port 2 connection the macro does a variety of tasks.
1) Disconnects the 2 ports
2) Disables the User timer event
3) Disables the PTT On event
4) Disables the PTT Off event

The user would rename macro #01 to your Link ON codes, and rename macro #02 to your Link OFF codes. It may be nice to make the following changes to the on\off macros an add some customized message inside the macro so your users know what happened.

(These macros are the same as above with a minor change)
5) Use Macro #01 as the Port 1-Port 2 On command

```
      - 127 01 D or unkey              ; Clear Macro 01's contents
*     - 130 01 048 04 D or unkey       ; Recall Custom ON message
      - 130 01 131 D or unkey          ; Cancel all responses following this command
**    - 130 01 000 1 2 D or unkey      ; Connect port 1 to port 2
      - 130 01 065 070 1 D or unkey    ; Enable User Timer #1's Event
      - 130 01 065 040 1 D or unkey    ; Enable Port 2 PTT Active reset User Timer
      - 130 01 065 069 1 D or unkey    ; Enable Port 2 PTT Inactive reset User Timer
```

6) User Macro #02 as the Port1-Port 2 Off command

```
      - 127 02 D or unkey              ; Clear Macro 02's contents
*     - 130 02 048 05 D or unkey       ; Recall Custom OFF message
      - 130 02 131 D or unkey          ; Cancel all responses following this command
**    - 130 02 002 1 2 D or unkey      ; Disconnect port 1 from port 2
      - 130 02 065 070 0 D or unkey    ; Disable User Timer #1's Event
      - 130 02 065 040 0 D or unkey    ; Disable Port 2 PTT Active reset User Timer
      - 130 02 065 069 0 D or unkey    ; Disable Port 2 PTT Inactive reset User Timer
```

* Added a message request
** Moved the connect command until after the response suppress command

Build a Custom ON\OFF Message: Try these changes for your set-up

```
049 04 1 408 097 358 086 701 D or unkey   ; Message: Remote Base On At <Time>
049 05 1 408 097 354 086 701 D or unkey   ; Message: Remote Base OFF At <Time>
```

Example 6-2: How to correctly set-up your ID timers

In order for the controllers ID sequencer to work correctly, the user must set-up the ID timers correctly. The ID timers are designed to allow rotating ID's and initial ID's. The timers that are used to select and cycle through these timers are important to insure proper ID'ing with respect to the rules for system identification. Here are a few points to keep in mind when setting up your ID system

1) No more than 10 minutes can expire between an ID sequence

2) The initial ID is only sent when the initial ID timer has expired

3) The initial ID timer must be longer than the pending ID timer

4) The wait ID timer added to the pending ID timer must not be longer than the initial ID timer

Easy rule for setting up your timers

- Set your initial ID timer to 10 minutes (See Command 050-052)
- Set your pending ID timer to 9 minutes
- Set your wait ID timer to 30 seconds

After a long period of inactivity (Longer than the initial ID timer since the last ID), and a carrier is received on a repeater port, the controller will start 2 timers. Timer 1 is the pending ID timer and timer 2 is the ID wait timer. While the carrier is running, the controller (initial ID) knows an ID is needed. If the carrier does not unkey before the wait timer expires, the impolite ID will be sent. If the carrier drops before the wait timer expires, then the initial ID is sent. Once the ID's have been sent both the initial ID and the pending ID timers are re-started. When either of the timers expire the appropriate ID will be sent. If the pending ID timer expires first (Correct operation) and the receivers carrier is present the wait timer is started.

* Note that the initial ID timer is still running even though the pending timer has expired.

If the wait timer expires while the carrier is still present, and the initial ID has not expired, then the pending ID is sent. If the initial ID timer has expired then the initial ID is sent.

Conclusion:
If you get sporadic initial ID's when you expect a pending ID, then make sure your timers are set-up as discussed above. A simple to help calculate your pending ID time is:

Pending Time = (Initial ID Timer) - (Wait Timer) - (10 Seconds)
= (10 Minutes) - (30 Seconds) - (10 Seconds)
= 600 seconds - 30 seconds - 10 seconds
= 560 seconds: Maximum Pending ID time for correct ID sequence

Chapter 7 Scheduler, Time-of Day Clock

This chapter deals with the commands used in the event scheduler, time-of day clock, and the calendar functions.

053: Speak Good Morning, Afternoon, or Evening

This command simply speaks the part of the day it is. If the time is between 12:00AM and 11:59AM the female voice message is 'Good Morning'. If the time is between 12:00PM and 5:59PM the female voice message is 'Good Afternoon'. If the time is between 6:00PM and 11:59PM the female voice message is 'Good Evening'.

<053>

Parameters:
There are no parameters for this command

Defaults:
There are no defaults for this command

Notes:
- Special voice word 700 speaks Good Morning, Afternoon, or Evening. To add these phrases to any voice message simply include word 700.

Error Codes:

(System wide errors are listed in front of the manual)

Example 1:
I want to know the part of the day it is

053 D or unkey

Response:
Voice: 'Good <Morning><Afternoon><Evening>'

054: Recall Time-of-Day Clock (Male)
124: Recall Time-of-Day Clock in 24 Hour Mode (Male)

This command reads the time-of-day clock in male speech. Software version 4.30 added the ability to also read the time-of-day clock in 24 hour mode.

<054>

Parameters:
There are no parameters for this command

Defaults:
There are no defaults for this command

Notes:
- Special voice word 701 speaks Male time-of-day. To add these phrases to any voice message simply include word 701.

Error Codes:

(System wide errors are listed in front of the manual)

Example 1:
I want to know the time-of-day

054 D or unkey

Response:
Voice: '<Time>'

055: Recall Time-of-Day Clock (Female)

This command reads the time-of-day clock in female speech.

<055>

Parameters:
There are no parameters for this command

Defaults:
There are no defaults for this command

Notes:
- Special voice word 702 speaks Female time-of-day. To add these phrases to any voice message simply include word 702.

Error Codes:

(System wide errors are listed in front of the manual)

Example 1:
I want to know the time-of-day

055 D or unkey

Response:
Voice: 'The Time Is<Time>'

056: Recall Date (Male)

This command reads the date in male speech.

<056>

Parameters:
There are no parameters for this command

Defaults:
There are no defaults for this command

Notes:
- Special voice word 703 speaks Male date. To add these phrases to any voice message simply include word 703.

Error Codes:

(System wide errors are listed in front of the manual)

Example 1:
I want to know what the date is.

056 D or unkey

Response:
Voice: '<Day of the week> <Month> <Day> <Year>'

057: Recall the Day (Male)

This command reads the day in male speech.

<057>

Parameters:
There are no parameters for this command

Defaults:
There are no defaults for this command

Notes:
- Special voice word 704 speaks Male day. To add these phrases to any voice message simply include word 704.

Error Codes:

(System wide errors are listed in front of the manual)

Example 1:
I want to know what day it is.

057 D or unkey

Response:
Voice: '<Day>'

058: Setting the Time

This command sets the internal clocks time-of-day. Setting the time is in 12 hour format with an AM/PM digit.

<058> *hh mm a/p*

Parameters:
HH are the hours that range from 01..12
MM are the minutes that range from 00..59
A/P indicate what part of the day it is
0 - AM
1 - PM

Defaults:
There are no defaults for this command

Error Codes:
E1 - Invalid hour setting. Number must be between 01..12
E2 - Invalid minute setting. Number must be between 00..59
E3 - Invalid AM/PM setting. Number must be between 0..1
(System wide errors are listed in front of the manual)

Example 1:
I want to set the time to 3:35 PM

058 03 35 1 D or unkey

Response:
Voice: 'Good <Morning,Afternoon,Evening> The Time Is <Time>'

059: Setting the Date, Y2K Compliant

This command sets the internal clocks date function.

<059> *mm dd yyyy z*

Parameters:
MM is the month indication that range from 01..12
DD is the day indication that ranges from 01..31
YY is the year indication that ranges from 0000..9999 (1998 for example) (Version 4.30 and later)

Z is the day of the week

Number	Day of the Week
1	Sunday
2	Monday
3	Tuesday
4	Wednesday
5	Thursday
6	Friday
7	Saturday

Defaults:
There are no defaults for this command

Error Codes:
E1 - Invalid month setting. Number must be between 01..12
E2 - Invalid day setting. Number must be between 00..31
E3 - Invalid year setting. Number must be between 00..99
E4 - Invalid day of the week setting. Number must be between 1..7
(System wide errors are listed in front of the manual)

Example 1:
I want to set the date to November 28, 1998 Tuesday

059 11 28 1998 3

Response:
"<Month> <Day> <Year> <Day of the week>"

060: Scheduler Event Recall

This command recalls a scheduler slot. There are 20 slots that can be programmed from hourly to yearly events. The commands that are executed with the scheduler are located in the event table (See Command 063,064,065).

<060> *xx*

Parameters:
XX is the scheduler slot that ranges from 01..20.

Defaults:
All scheduler slots are off

Error Codes:
E1 - Invalid scheduler slot
(System wide errors are listed in front of the manual)

Example 1:
I want to see what if anything is in scheduler slot 05

060 05 D or unkey

Response:
"<ON/OFF>" or
"Scheduler contents (See Command 061 for definitions)"

061: Scheduler Event Program

This command programs the scheduler events. Pay special attention to the format of the hourly information.

- **Hourly Event**

<061> *ss mm*

Parameters:
SS is the scheduler slot that ranges from 01..20.
MM is the minute that an event is requested. This number ranges from 01..59

- **Daily Event**

<061> *ss hh a/p mm*

Parameters:
SS is the scheduler slot that ranges from 01..20.
HH is the hour that an event is requested. This number ranges from 01..12
A/P is the hour AM/PM the that an event is requested. This number ranges from 0..1
0 - AM
1 - PM
MM is the minute that an event is requested. This number ranges from 00..59

- **Weekly Event**

<061> *ss dd hh a/p mm*

Parameters:
SS is the scheduler slot that ranges from 01..20.
DD is the day of that an event is requested. This number ranges from 01..07
Z is the day of the week

Number	Day of the Week
01	Sunday
02	Monday
03	Tuesday
04	Wednesday
05	Thursday
06	Friday
07	Saturday

HH is the hour that an event is requested. This number ranges from 01..12
A/P is the hour AM/PM that an event is requested. This number ranges from 0..1
0 - AM
1 - PM
MM is the minute that an event is requested. This number ranges from 00..59

- **Monthly Event**

<061> *ss nn dd hh a/p mm*

Parameters:
SS is the scheduler slot that ranges from 01..20.
NN is the month that an event is requested. This number ranges from 01..12
DD is the day that an event is requested. This number ranges from 01..31
HH is the hour that an event is requested. This number ranges from 01..12
A/P is the hour AM/PM the that an event is requested. This number ranges from 0..1
0 - AM
1 - PM
MM is the minute that an event is requested. This number ranges from 00..59

- **Yearly Event**

<061> *ss yy nn dd hh a/p mm*

Parameters:
SS is the scheduler slot that ranges from 01..20.
YY is the year that an event is requested. This number ranges from 00..99
NN is the month that an event is requested. This number ranges from 01..12
DD is the day that an event is requested. This number ranges from 01..31
HH is the hour that an event is requested. This number ranges from 01..12
A/P is the hour AM/PM the that an event is requested. This number ranges from 0..1
0 - AM
1 - PM
MM is the minute that an event is requested. This number ranges from 00..59

Defaults:
All scheduler slots are off

Error Codes:
E1 - Invalid scheduler slot
E2 - Error in converting one of the entry segments (Year,Month,Day etc...)
(System wide errors are listed in front of the manual)

Voice Response:
Hourly: <ON> <Minute>
Daily:<ON> <Hour> <AM/PM> <Minute>
Weekly:<ON> <Day> <Hour> <AM/PM> <Minute>
Monthly:<ON> <Month><Day> <Hour> <AM/PM> <Minute>
Yearly:<ON> <Year><Month><Day> <Hour> <AM/PM> <Minute>

062: Scheduler Event Enable/Disable

This command allows the enable/disable control of a scheduler event.

<062> *xx y*

Parameters:
XX is the scheduler slot that ranges from 01..20.
Y is the control variable
- 1 - Enable the scheduler event
- 0 - Disables the scheduler event

Defaults:
All scheduler slots are off

Error Codes:
E1 - Invalid scheduler slot
(System wide errors are listed in front of the manual)

Example 1:
I want to disable scheduler slot #14

062 14 0 D or unkey

Response:
"<Scheduler slot> <ON/OFF>"

Examples for Chapter 7

Example 7-1: Set-up the Scheduler to reset my Analog High/Low Readings at 12:00AM

I need the controller to reset the outside temperature sensor high/low readings at 12:00AM so the true high/low the users requests is accurate for that day. The temperature uses analog input 1.

1) Choose a daily event for the calling of a macro.

- 061 01 12 0 00 D or unkey ; Programs event 01 for 12:00AM

Where (01) is the scheduler slot, (12) is the hour of the event, (0) indicates AM, (00) is the minutes when the event occurs. When this event expires, it will request an event. We will have that event call the macro to reset the high/lows.

2) Program Scheduler event 01 to call macro 05.

- 064 019 2 145 1 D or unkey ; Programs event to execute a command

Where (019) is scheduler event 01, (2) is the event type that calls a command, (145) is the command to be executed: macro 05, (1) is where to route to response from the macro.

3) Program macro 05 to clear analog 1's high/low

- 127 05 D or unkey ; Clears macro 05
- 130 05 045 364 441 469 127 D or unkey ; Speaks 'Out Side Temperature Clear'
- 130 05 131 D or unkey ; Cancels responses
- 130 05 074 1 D or unkey ; Reset Analog 1 high/low values

4) The outside temperature high/lows are now cleared at 12:00 AM daily. When the scheduler expires it calls macro 05 which clears the analog high/low data.

Example 7-2: Set-up the Scheduler to Enable Time readings on the hour beginning at 8:00 AM until 6:00 PM

The scheduler can be used to enable/disable other scheduler events. In this example you are employing 3 scheduler events.

1) Scheduler event 1 is a daily event that enables the time being spoken hourly event
2) Scheduler event 2 is an hourly event that enables the time spoken
3) Scheduler event 3 is a daily event that disabled the time being spoken hourly event

This may seem a difficult task, but it walk through the steps and see how easy it really is.

1) Set-up the scheduler events

- 061 02 08 0 00 D or unkey ; Scheduler 02 is a daily event at 8:00AM
- 061 03 06 1 00 D or unkey ; Scheduler 03 is a dialy event at 6:00 PM
- 061 04 00 D or unkey ; Scheduler 04 is an hourly event on the hour

2) Set-up the event tables calling of macros 06 and 07

- Macro 06 will enable the hourly event and Macro 07 will disable the hourly event.
  - 127 06 D or unkey ; Clear macro 06
  - 130 06 131 D or unkey ; Cancels responses
  - 130 06 065 020 1 D or unkey ; Enables the hourly event

- Macro 07 will disable the hourly event.
  - 127 07 D or unkey ; Clear macro 07
  - 130 07 131 D or unkey ; Cancels responses
  - 130 07 065 020 0 D or unkey ; Disables the hourly event

3) Set-up the scheduler events

- 064 019 2 146 01 D or unkey ; Event 031 calls command 146, macro 06
- 064 020 2 147 01 D or unkey ; Event 032 calls command 147, macro 07
* - 064 021 2 055 01 D or unkey ; Event 033 calls command 055, speak the time

Once these events begin to run the controller will speak the female time at the top of the hour.

To make the time be spoken politely (If there is activity when the voice begins, the voice is canceled) have scheduler slot 03 call a message slot that speaks the time with the polite word as part of the message.

1) Change '*' to read: 064 021 1 005 1 D or unkey ; Request message slot 05

2) Program your time reading as a message

- 049 05 1 702 733 D or unkey ; speak the time politely

The time is now polite when called from a message slot.

Chapter 8: Event Tables

This command deals with the system event tables. These tables control command fetching for most system events.

063: Recall an Event

This command allows the user to recall an event entry. These events are the most important function of the RLC-1 controller. With the events most functions of the controller can be controlled, handled, or spoken.

<063> *xxx*

Parameters:
XXX is the event table slot. This number ranges from 000..080

Defaults:
All event are off

Error Codes:
E1 - Invalid event slot

(System wide errors are listed in front of the manual)

Example 1:
I want to see if my courtesy beep event is enabled for Port 1

063 011 D or unkey

Response:
"<Slot Number> is <Message Type>, <Slot Number> is <ON/OFF>, Route is <Audio Routing Variable>"

064: Program an Event

This command program an event table entry. These events are the most important function of the RLC-1 controller. With the events most functions of the controller can be controlled, handled, or spoken.

<064> *sss t xxx r*

Parameters:
SSS is the event table slot. This number ranges from 000..080

Slot Number	Description
000	Controller Reset just occurred
001	Port 1 Initial ID
002	Port 1 Rotating ID 1
003	Port 1 Rotating ID 2
004	Port 1 Rotating ID 3
005	Port 1 Forced ID
006	Port 2 Initial ID
007	Port 2 Rotating ID 1
008	Port 2 Rotating ID 2
009	Port 2 Rotating ID 3
010	Port 2 Forced ID
011	Port 1 Courtesy Beep Requested
012	Port 2 Courtesy Beep Requested
013	Port 1 Drop-out Message 1
014	Port 1 Drop-out Message 2
015	Port 2 Drop-out Message 1
016	Port 2 Drop-out Message 2
017	Port 1 Time-Out Timer Message
018	Port 2 Time-Out Timer Message
019	Scheduler Event 01
020	Scheduler Event 02
021	Scheduler Event 03

Slot Number	Description
022	Scheduler Event 04
023	Scheduler Event 05
024	Scheduler Event 06
025	Scheduler Event 07
026	Scheduler Event 08
027	Scheduler Event 09
028	Scheduler Event 10
029	Scheduler Event 11
030	Scheduler Event 12
031	Scheduler Event 13
032	Scheduler Event 14
033	Scheduler Event 15 or Pre-Access Port 1 just went active
034	Scheduler Event 16 or Pre-Access Port 2 just went active
035	Scheduler Event 17 or Pre-Access Port 3 just went active
036	Scheduler Event 18 or Pre-Access Port 1 just went inactive
037	Scheduler Event 19 or Pre-Access Port 2 just went inactive
038	Scheduler Event 20 or Pre-Access Port 3 just went inactive
039	Port 1 PTT Just Went Active
040	Port 2 PTT Just Went Active
041	LTZ (Long Tone Zero) Event requested
042	Port 1 Receiver just went Active
043	Port 2 Receiver just went Active
044	Port 1 Receiver just went Inactive
045	Port 2 Receiver just went Inactive
046	Analog 1 just went into High Alarm
047	Analog 2 just went into High Alarm

048	Analog 3 just went into High Alarm

Slot Number	Description
049	Analog 4 just went into High Alarm
050	Analog 1 just went into Low Alarm
051	Analog 2 just went into Low Alarm
052	Analog 3 just went into Low Alarm
053	Analog 4 just went into Low Alarm
054	Analog 1 just came out of Alarm
055	Analog 2 just came out of Alarm
056	Analog 3 just came out of Alarm
057	Analog 4 just came out of Alarm
058	Input 1 just went Low
059	Input 2 just went Low
060	Input 3 just went Low
061	Input 4 just went Low
062	Input 1 just went High
063	Input 2 just went High
064	Input 3 just went High
065	Input 4 just went High
066	DTMF Decoder just went Active
067	DTMF Decoder just went Inactive
068	Port 1 PTT just went Inactive
069	Port 2 PTT just went Inactive
070	User Timer 1 just Expired
071	User Timer 2 just Expired
072	User Timer 3 just Expired
073	User Timer 4 just Expired
074	User Timer 5 just Expired

075	Port 1 voice message was interrupted (See Command 045)
Slot Number	Description
076	Port 2 voice message was interrupted (See Command 045)
077	Pre-Access just requested on Port 1
078	Pre-Access just requested on Port 2
079	Pre-Access just closed on Port 1
080	Pre-Access just closed on Port 2

T is the event type

Event Number	Event Type
0	No Event, Same as Disabling the Event
1	Request a message from the Message Slot Storage (Command 048 and 049)
2	Request a Command be executed. Commands can not contain any additional data
3	Request a Pre-Programmed Courtesy Beep Slot (Command 042)
4	Request an internal, pre-programmed message

XXX is the message number

If your event type (T) is 1	XXX = Message Slot Number Slot 01 = 001
If your event type (T) is 2	XXX = Command Number to be Executed Command 055 = 055
If your event type (T) is 3	XXX = Pre-Programmed Courtesy Beep Beep 04 = 004 (See Command 042)
If your event type (T) is 4	XXX = Pre-Programmed internal message Message 03 = 003 (See Below)

R is the audio routing variable

DTMF Allowed Execution of the Command	Number that corresponds to the device
Port 1	+1
Port 2	+2

(R) Audio routing variable = (port1)+(port2)

Special routing variables are provided to allow routing of messages to connected ports.

Audio Routing Number	Definition
4	Route responses to all ports connected to Port 1
5	Route responses to all ports connected to Port 2
6	Route responses to all ports that are repeaters connected to Port 1
7	Route responses to all ports that are repeaters connected to Port 2
8	Route responses to all ports that are connected to the port that is controlling with DTMF, including the DTMF'ing port
9	Route responses to all ports that are repeaters connected to the port that is controlling with DTMF, including the DTMF'ing port

Defaults:

Event #	Message Definition
000	Reset Message: Defaults to Internal Message 00
001	Port 1, Initial ID: Defaults to Internal Message 06
002	Port 1, Rotating ID 1: Defaults to Internal Message 07
003	Port 1, Rotating ID 2: Defaults to Internal Message 08
004	Port 1, Rotating ID 3: Defaults to Internal Message 09
005	Port 1, Forced ID: Defaults to Internal Message 10
011	Port 1 Courtesy Beep: Defaults to Preset beep 06
012	Port 2 Courtesy Beep: Defaults to Preset beep 07
017	Port 1 Time-Out Message: Defaults to Internal Message 02

Internal Messages:

Message #	Message Contents:
00	Controller Ready
01	Repeater Time-Out
02	Link Time-Out
03	Welcome To The Repeater Identify 1
04	Welcome To The Repeater Identify 2
05	Welcome To The Repeater Intentify 3
06	Welcome To The Repeater Intentify 4
07	Welcome To The Repeater Intentify 5
08	The Door is Open
09	The Door is Closed

Error Codes:
E1 - Invalid event slot number. Number must range from 000..080
E2 - Invalid event type. Number must range from 0..4
(System wide errors are listed in front of the manual)

Example:
I need to assign a pre-programmed courtesy beep to port 1

064 011 3 006 1 D or unkey

Response:
"<Slot Number> is <Message Type>, <Slot Number> is <ON/OFF>, Route is <Audio Routing Variable>"

065: Enable/Disable an Event

This command enables and disables an event slot. This does the same as setting the event to a '0' type, but does not require the complete re-programming of that event. Therefore other events can enable/disable events without affecting their contents.

<065> *xxx y*

Parameters:
XXX is the event table slot. This number ranges from 000..080
Y is the control variable
1 - Enables the event
0 - Disables the event

Defaults:
All event are off

Error Codes:
E1 - Invalid event slot
(System wide errors are listed in front of the manual)

Example 1:
I want to disable Port 1's courtesy beep.

065 011 0 D or unkey

Response:
"<Event Number> is <ON/OFF>"

Examples for Chapter 8

Example 8-1: How to have a Voice ID revert to a CW ID

A commonly asked question is how to cause a Voice ID to change to a CW ID when interrupted. This term is called a polite voice ID. There are 3 steps in making an ID polite.

1) Include the voice special word '734' in the voice message
2) Program a CW ID slot
3) Assign event 075 (If for port 1) to call your CW ID

Step #1
Store my Initial ID into slot #01 'Welcome to the K F 7 F W Repeater <Pause> Good M/A/E'
- 049 01 1 526 002 476 041 036 007 036 053 411 587 700 **734** D or unkey or <Enter>
** Note the '734' at the end of the sequence indicates a polite ID that calls an event when interrupted.

Step #2
Program a CW ID into slot #05 'K F 7 F W / R '
- 049 05 0 20 15 07 15 22 36 27 D or unkey or <Enter>

Step #3
Assign event 075 (Port 1 voice interrupted event) to call message slot 005
- 064 075 1 005 1 D or unkey or <Enter>

Now to test what you just programmed recall message 01 using Command 048 01 <unkey>, when you key-up in the middle of the message it will switch over to CW.

Chapter 9: Analog Input System

This chapter deals with the analog I\O system, commands, conversions and calibrations.

070: Analog Line Faceplate Assignment

This command allows the assignment of an analog conversion faceplate to any of the analog input lines. These conversion faceplates take the analog input voltage and convert it to a number that corresponds to the analog inputs voltage. This command only converts the input, Command 072 will handle the actual calibration of the converted number.

<070> *x yy*

Parameters:
X is the analog input to assign the faceplate. This number ranges from 1..4

YY is the requested analog conversion faceplate

Faceplate #	Conversion from volts to words
00	0<point>00 - 5<point>00
01	00<point>0 - 16<point>0
02	00<point>0 - 32<point>0
03	00<point>0 - 64<point>0
04	00<point>0 - 128<point>0
05	000 - 255
06	Low Resolution Fahrenheit
07	Low Resolution Celsius
08	High Resolution Fahrenheit
09	High Resolution Celsius
10	000 - 100 (Percent)
11	000 - 360 (Wind direction)
12	00<point>0 - 25<point>0
13	Special Faceplate (See Below)
14	S0..S9<plus>60 (Signal Level)
15	Calm .. 100MPH Wind Speed

Special Faceplate:
This faceplate is provided to allow custom responses for input voltages. Applications for this faceplate is special wind directions, 8-quadrant conversion results etc...

Analog Input Value	Special Message Slot	Analog Input Value	Special Message Slot
Vinput ÷ 8	51	Vinput ÷ 4	55
Vinput ÷ 7	52	Vinput ÷ 3	56
Vinput ÷ 6	53	Vinput ÷ 2	57
Vinput ÷ 5	54	Vinput ÷ 1	58

Voltage input limitations:
In order for the RLC-1 to allow higher that 5.00 volts input, external voltage dividers are required. When higher input voltages are used, an external voltage divider is required to scale the input voltage to span a maximum of 0..5V. When voltages below 5.00 volts are used (like temperature sensors), no external voltage divider is needed. When attaching a temperature sensor, the on-board jumper is used to apply the needed power to the analog input line needed in powering the external temperature sensor.

Jumper Definition

Jumper Number	Jumper Function
J9	Temperature Power, Analog 1
J8	Temperature Power, Analog 2
J7	Temperature Power, Analog 3
J6	Temperature Power, Analog 4

Defaults:
All faceplates set to 00

Notes:
- Check your board before connecting any voltage input.

Error Codes:
E1 - Invalid analog input line. Number must be between 1..4
E2 - Invalid analog faceplate. Number must be between 00..15
(System wide errors are listed in front of the manual)

Example 1:
I need to monitor my 12 battery voltage on analog #2 (Use an external resistor divider to scale the input)
(Assume the analog input is set-up to handle the voltage)

070 2 01 D or unkey

Response:
"<Analog Line> is <Faceplate>"

Analog Input Scaling:

For analog inputs greater than 5.0 volts, the following scaling resistor network must be used. For correct voltage reading use faceplate 12. This allows the controller to correctly scale the analog input to match the controllers calibration.

0..25V Input.
R series =
40.2K, R
parallel = 10K

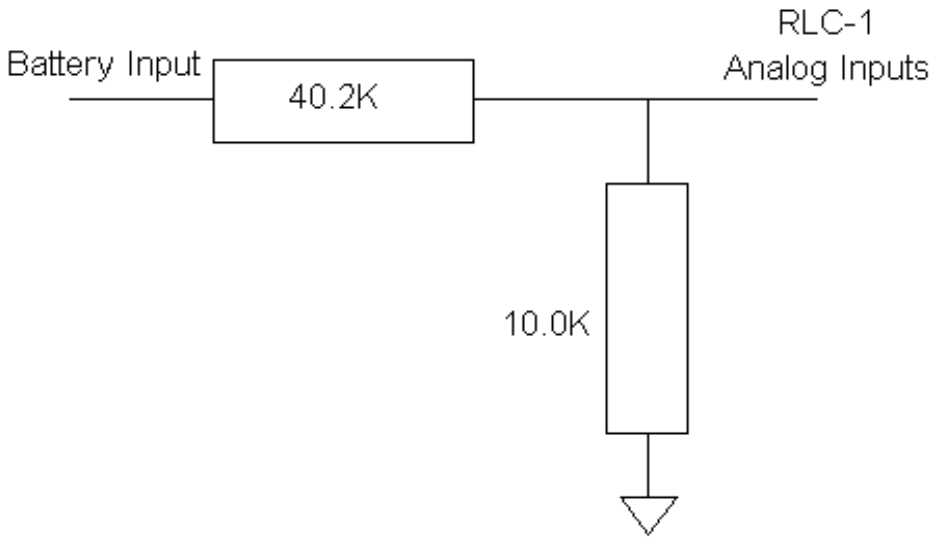

071: Recall Analog Faceplate

This command allows the user to recall what conversion faceplate is assigned to a specific analog input line. If a conversion result is not converting as expected, then first check the conversion faceplate to make sure it is correct.

<071> *x*

Parameters:
X is the analog input to assign the faceplate. This number ranges from 1..4

Defaults:
All faceplates set to 00

Error Codes:
E1 - Invalid analog input line. Number must be between 1..4
(System wide errors are listed in front of the manual)

Example 1:
I am getting a wrong analog readback from analog 4. I need to check the faceplate.

071 4 D or unkey

Response:
"Analog Line> is <Faceplate>"

072: Analog Line Calibration

This command allows the user to calibrate an analog input. This feature is required to make an input translate the input voltage to a voice number correctly.

To determine if an input needs to be calibrated:
1) Assign the appropriate conversion face
2) Read the analog input using Command 075
   If the number read differs from the number at the analog input, you need to calibrate

<072> *x y* zz

Parameters:
X is the analog input line. This number is between 1..4
Y is control variable
    1 - Add the offset
    0 - Subtract the offset
ZZ is the calibration number. This number is between 00..99

Defaults:
All analog calibration is plus 00

Notes:
- If you can not calibrate an input, check your switch settings and faceplates

Error Codes:
E1 - Invalid analog line. This number must be between 1..4
(System wide errors are listed in front of the manual)

Example 1:
My temperature sensor on analog input 2 reads high. I need to calibrate is down

072 2 0 03 D or unkey

Response:
"<Analog Line> is <Calibration Number>"

073: Recall Analog Line Calibration

This command allows the user to recall the calibration variables. These variables are explained in Command 072

<073> *x*

Parameters:
X is the analog input line. This number is between 1..4

Defaults:
All analog calibration is plus 00

Error Codes:
E1 - Invalid analog line. This number must be between 1..4
(System wide errors are listed in front of the manual)

Example 1:
I want to check the calibration value for analog input 4

073 4 D or unkey

Response:
"<Analog Line> is <Calibration Value>"

074: Reset Analog 1-4 High/Low Values

This command allows the user to reset the analog input high-low variations to the current reading. This feature must be used when monitoring the maximum-minimum extremes that your analog inputs take. Once a high level is reached, any lower readings will not be stored for the high reading. The same procedure is true for the lower extremes. This command also resets the high/low times and the high/low dates.

<074> *x*

Parameters:
X is an analog input. This number must be between 1..4

Defaults:
Analog high/lows are cleared on reset

Error Codes:
E1 - Invalid analog line. This number must be between 1..4
(System wide errors are listed in front of the manual)

Example 1:
I want to reset my temperature sensors on analog 1,2.

074 1 2 D or unkey

Response:
"<Analog Line> is 0"

075: Read an Analog Line

This command allows the user to read selected analog inputs. The user would normally not use this command for day-to-day operation. Because of the analog reading special words (Words 705..708), the user would normally include these words for message readback. This command is mainly used for setting up the analog system.

<075> *x*

Parameters:
X is the analog input. This number must be between 1..4

Defaults:
There are no defaults for this command

Error Codes:
E1 - Invalid analog line. This number must be between 1..4
(System wide errors are listed in front of the manual)

Example 1:
I want to read analog 3 input line

075 3 D or unkey

Response:
"<Analog Line>"

076: Read an Analog High Value

This command allow the user to recall the analog high extreme readings. The user would normally not use this command for day-to-day operation. Because of the analog high reading special words (Words 709..712), the user would normally include these words for message readback. This command is mainly used for setting up the analog system.

<076> *x*

Parameters:
X is the analog inputs. This number must be between 1..4

Defaults:
Analog high/lows are cleared on reset

Error Codes:
E1 - Invalid analog line. This number must be between 1..4
(System wide errors are listed in front of the manual)

Example 1:
I want to check analog 1 high value

076 1 D or unkey

Response:
"<Analog High Value>"

077: Read an Analog Low Value

This command allow the user to recall the analog low extreme readings. The user would normally not use this command for day-to-day operation. Because of the analog low reading special words (Words 713..716), the user would normally include these words for message readback. This command is mainly used for setting up the analog system.

<077> *x*

Parameters:
X is the analog inputs. This number must be between 1..4

Defaults:
Analog high/lows are cleared on reset

Error Codes:
E1 - Invalid analog line. This number must be between 1..4
(System wide errors are listed in front of the manual)

Example 1:
I want to check analog 4 low value

077 4 D or unkey

Response:
"<Analog High Value>"

078: Read an Analog High Line Time

This command allow the user to recall the time an analog high extreme occurred. The user would normally not use this command for day-to-day operation. Because of the analog high time special words (Words 717..720), the user would normally include these words for message readback. This command is mainly used for setting up the analog system.

<078> *x*

Parameters:
X is the analog inputs. This number must be between 1..4

Defaults:
Analog high/lows are cleared on reset

Error Codes:
E1 - Invalid analog line. This number must be between 1..4
(System wide errors are listed in front of the manual)

Example 1:
I want to check the time analog 1 reached its high value

078 1 D or unkey

Response:
"<Time>"

079: Read an Analog Low Line Time

This command allow the user to recall the time an analog low extreme occurred. The user would normally not use this command for day-to-day operation. Because of the analog low time special words (Words 721..724), the user would normally include these words for message readback. This command is mainly used for setting up the analog system.

<079> *x*

Parameters:
X is the analog inputs. This number must be between 1..4

Defaults:
Analog high/lows are cleared on reset

Error Codes:
E1 - Invalid analog line. This number must be between 1..4
(System wide errors are listed in front of the manual)

Example 1:
I want to check the time analog 1 reached its low value

079 1 D or unkey

Response:
"<Time>"

080: Read an Analog High Date

This command allow the user to recall the date an analog high extreme occurred. The user would normally not use this command for day-to-day operation. Because of the analog date special words (Words 725..728), the user would normally include these words for message readback. This command is mainly used for setting up the analog system.

<080> *x*

Parameters:
X is the analog inputs. This number must be between 1..4

Defaults:
Analog high/lows are cleared on reset

Error Codes:
E1 - Invalid analog line. This number must be between 1..4
(System wide errors are listed in front of the manual)

Example 1:
I want to check the day analog 1 reached its high value

080 1 D or unkey

Response:
"<Date> <Day>"

081: Read an Analog Low Date

This command allow the user to recall the date an analog low extreme occurred. The user would normally not use this command for day-to-day operation. Because of the analog date special words (Words 729..732), the user would normally include these words for message readback. This command is mainly used for setting up the analog system.

<081> *x*

Parameters:
X is the analog inputs. This number must be between 1..4

Defaults:
Analog high/lows are cleared on reset

Error Codes:
E1 - Invalid analog line. This number must be between 1..4
(System wide errors are listed in front of the manual)

Example 1:
I want to check the day analog 1 reached its low value

081 1 D or unkey

Response:
"<Date> <Day>"

082: Analog Line Alarm Value Program

This command allows the user to assign both high and low alarm points to the analog inputs. The applications for this command are for monitoring high and low points like temperature, voltage, door alarms, contact closures, and any analog or contact closure condition.

<082> *w x yyy*

Parameters:
W is the analog inputs. This number must be between 1..4
X is the alarm indicate programming variable
1 - High alarm programming
0 - Low alarm programming
YYY is the alarm point. This number must be between 000..255
The alarm tables are on the following 2 pages

How to use the tables for alarming:
When choosing an alarm point locate the faceplate that is assigned to the line being alarmed. Follow the numbers and locate a position that most closely defines the desired alarm point. Select the number that averages closest to the desired alarm point and enter it for the 'YYY' variable in the command name.

Defaults:
All alarms are disabled

Notes:
- The tables only provide a rough approximation of the alarm point. Once the 3 digit number is entered into the alarm function a formatted number will be spoken for the actual alarm point. If you want your alarm point to be closer simply re-enter a new alarm point number that is slightly different than the previous point. Do this until you achieve the desired alarm point.

Error Codes:
E1 - invalid analog line
E2 - Invalid analog alarm value
(System wide errors are listed in front of the manual)

Example 1:
I want to alarm analog 1 for a high alarm at 135°F. My faceplate is 06
(I located 121°F (205) and 149°F (215). I found the mid-point of 135°F to be 210)

082 1 1 210 D or unkey

Response:
"<Voltage the alarm point is at>"

YYY is the alarm point

Number	FC00	FC01	FC02	FC03	FC04	FC05	FC06	FC07	FC08
255	4.00	16.0	32.0	64.0	128.0	255	440	228	-042
245	3.84	15.4	30.7	61.5	123.0	245	404	208	-035
235	3.69	14.7	29.5	59.0	118.0	235	369	189	-028
225	3.53	14.1	28.2	56.5	112.9	225	334	169	-021
215	3.37	13.5	27.0	54.0	107.9	215	298	149	-014
205	3.22	12.9	25.7	51.5	102.9	205	263	130	-007
195	3.06	12.2	24.5	48.9	097.9	195	228	110	-001
185	2.90	11.6	23.2	46.4	092.9	185	192	090	006
175	2.75	11.0	22.0	43.9	087.8	175	157	071	013
165	2.59	10.4	20.7	41.4	082.8	165	122	051	020
155	2.43	09.7	19.5	38.9	077.8	155	087	031	027
145	2.27	09.1	18.2	36.4	072.8	145	051	012	034
135	2.12	08.5	16.9	33.9	067.8	135	016	-008	041
125	1.96	07.8	15.7	31.4	062.7	125	-019	-028	048
115	1.80	07.2	14.4	28.9	057.7	115	-055	-047	055
105	1.65	06.6	13.2	26.4	052.7	105	-090	-067	062
095	1.49	06.0	11.9	23.8	047.7	095	....	....	069
085	1.33	05.3	10.7	21.3	042.7	085	....	....	076
075	1.18	04.7	09.4	18.8	037.6	075	....	....	083
065	1.02	04.1	08.2	16.3	032.6	065	....	....	089
055	0.86	03.5	06.9	13.8	027.6	055	....	....	096
045	0.71	02.8	05.6	11.3	022.6	045	....	....	103
035	0.55	02.2	04.4	08.8	017.6	035	....	....	110
025	0.39	01.6	03.1	06.3	012.5	025	....	....	117
015	0.24	00.9	01.9	03.8	007.5	015	....	....	124
005	0.08	00.3	00.6	01.3	002.5	005	....	....	131
000	0.00	00.0	00.0	00.03	000.0	000	....	....	134

YYY is the alarm point

Number	FC09	FC10	FC11	FC12	FC13	FC14
255	-043	100	360	25.0	8	S9+60
245	-039	96	346	24.0	7	S9+60
235	-035	92	332	23.0	7	S9+50
225	-031	88	317	22.0	7	S9+50
215	-027	84	304	21.0	6	S9+40
205	-023	80	289	20.0	6	S9+30
195	-019	77	275	19.0	6	S9+30
185	-016	73	261	18.0	6	S9+20
175	-012	69	247	17.0	5	S9+20
165	-008	65	233	16.0	5	S9+10
155	-004	61	219	15.0	5	S9
145	-000	57	205	14.0	4	S9
135	004	53	191	13.0	4	S8
125	008	49	177	12.0	4	S7
115	012	45	162	11.0	4	S7
105	016	41	148	10.0	3	S6
95	020	37	134	09.0	3	S5
85	024	33	120	08.0	3	S5
75	027	29	106	07.0	3	S4
65	031	26	92	06.0	2	S4
55	035	22	78	05.0	2	S3
45	039	18	64	04.0	2	S2
35	043	14	49	03.0	1	S2
25	047	10	35	02.0	1	S1
15	051	6	21	01.0	1	S0
5	055	2	7	0.50	1	S0
0	056	0	0	0.00	1	S0

083: Check Analog Alarm Points

This command allows the checking of the alarm points set in the previous command.

<083> *x y*

Parameters:
X is the analog inputs. This number must be between 1..4
Y is the alarm indicate programming variable
1 - High alarm programming
0 - Low alarm programming

How to use the tables for alarming:
When choosing an alarm point locate the faceplate that is assigned to the line being alarmed. Follow the numbers and locate a position that most closely defines the desired alarm point. Select the number that averages closest to the desired alarm point and enter it for the 'YYY' variable in the command name.

Defaults:
All alarms are disabled

Notes:
- The tables only provide a rough approximation of the alarm point. Once the 3 digit number is entered into the alarm function a formatted number will be spoken for the actual alarm point. If you want your alarm point to be closer simply re-enter a new alarm point number that is slightly different than the previous point. Do this until you achieve the desired alarm point.

Error Codes:
E1 - Invalid analog line
(System wide errors are listed in front of the manual)

Example 1:
I want to check the high alarm setting for analog 1. My faceplate is 06

083 1 1 D or unkey

Response:
"<Formatted Analog Alarm Point>"

084: Check Analog Active Alarms

This command check if an analog line is in alarm. If the line is in alarm it will indicate what alarm condition the line is in.

<084> *x*

Parameters:
X is the analog inputs. This number must be between 1..4

Defaults:
All analog alarms are disabled

Error Codes:
E1 - Invalid analog line

(System wide errors are listed in front of the manual)

Example 1:
I need to check if my analog 4 is in alarm.

084 1 D or unkey

Response:
Either "<High Alarm>, <Low Alarm> or <Not in Alarm>"

Examples for Chapter 9

Example 9-1: Configure a High Temperature Alarm

The RLC-1 supports 4 analog input lines. These analog lines can convert most analog voltages into temperatures, voltages and signal strengths. One application is support for the LM335Z temperature sensor. This sensor converts temperature into voltage. The controller takes the voltage and converts it into a temperature for a formatted readback. The user can then take the converted number and assign it to a high and a low alarm for automated system alarming.

The steps in assigning the temperature alarm is to configure, calibrate, select and finally program the points where the alarm occur. When an alarm occurs the controller needs to assign a 'high temperature' message into drop-out message slot 1 on port 1's transmitter.

1) Assign a temperature faceplate to analog input 1

- 070 1 06 D or unkey ; Assigns Fahrenheit faceplate to input 1

Where (1) is the analog input line, (06) is the conversion faceplate

2) Calibration of the analog input is important to give a true reading of the input condition.

- 073 1 0 03 D or unkey ; Assigned a minus calibration to input 1

Where (1) is the analog input line, (0) indicates minus calibration, (03) is the calibration amount. This is just an example of how to calibrate, the actual calibration varies between controllers.

3) Choose the High alarm at 122 degrees (165 in the alarm table)

- 082 1 1 165 D or unkey ; Assigns the high alarm at 122°F

4) Program the high alarm event to enable the speaking of a drop-out message. We will use macro 13 (Command 153) for this purpose.

- 064 046 2 153 1 D or unkey ; Assign macro 13 to change the drop-out message

5) Program the coming out of alarm event to disable the speaking of a drop-out message. We will use macro 14 (Command 154) for this purpose.

- 064 054 2 154 1 D or unkey ; Assign macro 14 to change the drop-out message

6) Program macro 13 to simply enable port 1 drop-out message 1

- 127 13 D or unkey ; Clear macro 13
- 130 13 045 245 469 070 D or unkey ; Speak 'High Temp. Alert'
- 130 13 131 ; Cancel responses
- 130 13 065 013 1 ; Enable drop-out message port 1

7) Program macro 14 to simply disable port 1 drop-out message 1

- 127 14 D or unkey ; Clear macro 14
- 130 14 045 245 469 070 127 D or unkey ; Speak 'High Temp. Alert Clear'
- 130 14 131 ; Cancel responses
- 130 14 065 013 0 ; Disable drop-out message port 1

8) Program the Drop-out Message into message slot 10

- 049 10 1 469 070 D or unkey ; Programs the drop-out message 'Temp. Alert'

9) Programs the Drop-out event

- 064 021 1 010 1 D or unkey ; Programs the drop-out message event

These commands allow the controller to speak a message, and alert the users of the system of the alarm condition. Chapter 10 examples will use this example assigned to an input line to indicate intruder alarms.

Temperature Sensor Hook-Up

This figure shows the correct hook-up for the LM335Z temperature sensor. It is important to weather proof the sensors metal leads. If moisture is present the sensor may give an invalid reading. An easy way to moisture proof the sensor is using some type of hot melted glue that can be melted across the leads of the sensor. It is important not to completely cover the body of the sensor. If the body is covered internal heating will occur again causing errors in the temperature readings.

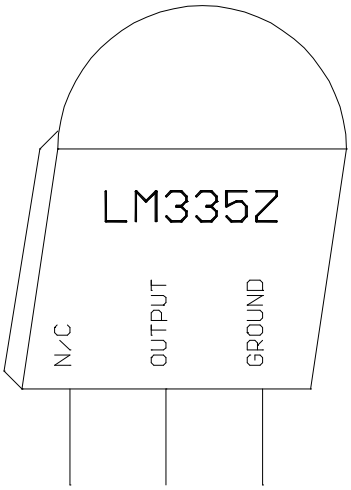

Reading AC Voltage with an Analog Input Line

This figure shows the correct way of reading the AC voltage from the 110VAC outlet without damaging the controllers analog inputs. It is important to use a transformer to isolate the AC line from the controller. The controller needs its analog input set for 00.0 .. 25.0 volts. Set the faceplate to type 05. To calibrate the voltage use a calibrated voltage meter. Read the line voltage and note this value. Then adjust the analog output to a value:

Analog Output = (AC input voltage) ÷10.

Voice response will indicate to the nearest volt the actual AC voltage.

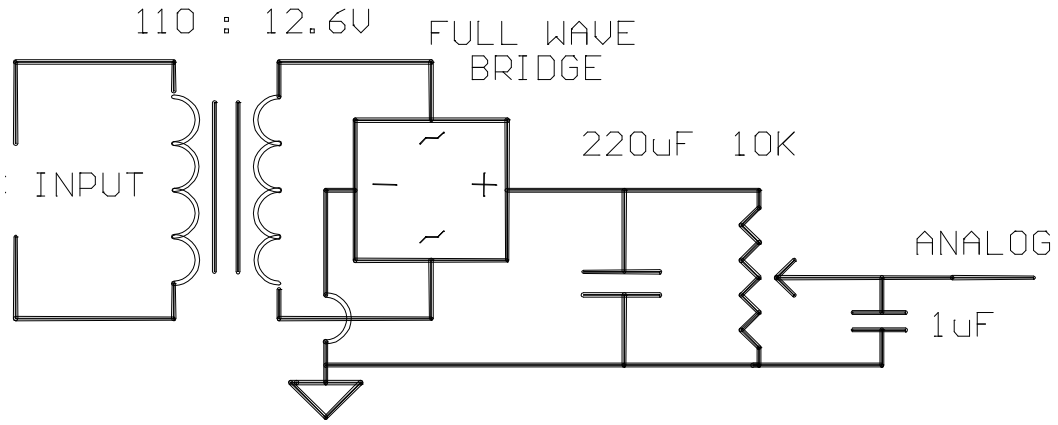

Reading Wind Speed with Analog Input 4

The RLC-1 supports wind speed conversion with pulse style wind speed sensors. Analog input 4 is the only analog channel that supports this type of device. In order for the sensor to function correctly, the voltage jumper for Analog 4 (J6) must be on. This provides the wind sensor with voltage to power the TTL pulse output.

Steps:

1) Set your analog faceplate to 15
   - Command 070 4 15

2) Verify the voltage jumper is in line.

3) Connect your wind speed sensor to Analog input 4

4) No calibration should be needed
   Read the analog input using Command 075 4
   - No wind = Word 'Calm'
   - Maximum wind = 100 MPH

Chapter 10: Input and Output Lines

These commands deal with the 4 contact closure inputs and the 8 latched output lines.

085: Read Input Lines

This command allows the user to read any of the input lines. The line is either High or Low. A low indicates the input line is at ground or 0V state. A high indicates the input line is a an open or above 4V.

<085> *x..x*

Parameters:
X..X are the input lines. These numbers can vary between 1..4
- You can read several input lines at once by entering all the lines in 1 sequence

Defaults:
Input lines are high (open)

Error Codes:
E1 - Invalid input line
(System wide errors are listed in front of the manual)

Example 1:
Input 1 is the door alarm. I need to check if it is high or low for the event table programming.

085 1 D or unkey

Response:
"<Input Line> is <High> or <Low>"

086: Output Line 1 On
087: Output Line 1 Off
088: Output Line 2 On
089: Output Line 2 Off
090: Output Line 3 On
091: Output Line 3 Off

These commands provide a short-cut to access the lower 3 output lines. They are provided so the user does not need a macro to turn on an output line with an event table change. Because these commands do not contain any additional data following the command name, the user can simply call any of these 6 commands when output line control is needed.

<086..091>

Parameters:
There are no parameters for these commands

Defaults:
All output lines default off

Notes:
- When an output line is Off, the line becomes a high impedance state. When the output line is turned on, it becomes a very low impedance. Use a ohm meter when checking the lines, not a voltage meter.

Error Codes:

(System wide errors are listed in front of the manual)

Response:
There are no responses for these commands

092: Output Line #..# On

This command allows the user to turn on any one of the 5 output lines. This command requires additional data to indicate what lines need to be turned on. The previous output line commands did not require any additional data.

<092> *x..x*

Parameters:
X..X are the output lines. These numbers can vary between 1..5
- You can turn on several output lines at once by entering all the lines in 1 sequence

Defaults:
All output lines default off

Error Codes:
E1 - Invalid output line. The number must range between 1..5
(System wide errors are listed in front of the manual)

Example 1:
I want to turn on outputs 1 3 5 in 1 command

092 1 3 5 D or unkey

Response:
"<Output Line> ON"

093: Output Line #..# Off

This command allows the user to turn off any one of the 5 output lines. This command requires additional data to indicate what lines need to be turned on. The previous output line commands did not require any additional data.

<093> *x..x*

Parameters:
X..X are the output lines. These numbers can vary between 1..5
- You can turn off several output lines at once by entering all the lines in 1 sequence

Defaults:
All output lines default off

Error Codes:
E1 - Invalid output line. The number must range between 1..5
(System wide errors are listed in front of the manual)

Example 1:
I want to turn off outputs 1 3 5 in 1 command

093 1 3 5 D or unkey

Response:
"<Output Line> OFF"

094: Check Output Lines

This command allows the user check the current condition of any output line. This command requires additional data to indicate what lines need to be turned on. The previous output line commands did not require any additional data.

<094> *x..x*

Parameters:
X..X are the output lines. These numbers can vary between 1..5
- You can turn check several output lines at once by entering all the lines in 1 sequence

Defaults:
All output lines default off

Error Codes:
E1 - Invalid output line. The number must range between 1..5
(System wide errors are listed in front of the manual)

Example 1:
I need to check what condition outputs 1 3 5 are currently in.

094 1 3 5 D or unkey

Response:
"<Output Line> <ON/OFF>"

Examples for Chapter 10

Example 10-1: Configure a Door Alarm

The RLC-1 supports 4 contact closure input lines. These lines are used to monitor contact closure events. The user can use these events for automated system alarming.

The steps in assigning a door alarm is to hook-up the magnetic door switch and assign the door open state and the door closed state. When an door open condition occurs the controller needs to assign a 'Door Open' message into drop-out message slot 2 on port 1's transmitter.

1) Program the input just went low event to drop-out message 2. We will use macro 15 (Command 155) for this purpose.

- 064 058 2 155 01 D or unkey ; Assign macro 15 to change the drop-out message

2) Program the input just went high event to disable the speaking of a drop-out message. We will use macro 16 (Command 156) for this purpose.

- 064 062 2 156 01 D or unkey ; Assign macro 16 to change the drop-out message

3) Program macro 15 to simply enable port 1 drop-out message 2

- 127 15 D or unkey ; Clear macro 15
- 130 15 045 170 359 070 D or unkey ; Speak 'Door Open Alert'
- 130 15 131 ; Cancel responses
- 130 15 065 014 1 ; Enable drop-out 2 message port 1

4) Program macro 16 to simply disable port 1 drop-out message 2

- 127 16 D or unkey ; Clear macro 16
- 130 16 045 170 359 070 127 D or unkey ; Speak 'Door Open Alert Clear'
- 130 16 131 ; Cancel responses
- 130 16 065 014 0 ; Disable drop-out message port 1

5) Program the Drop-out Message into message slot 11

- 049 11 1 170 359 D or unkey ; Programs the drop-out message 'Door Open'

6) Programs the Drop-out event

- 064 014 1 011 1 D or unkey ; Programs the drop-out message event

These commands allow the controller to speak a message, and alert the users of the system of the alarm condition. Chapter 9 examples will use this example assigned to an analog input line to indicate high temperature status.

Magnetic Door Switch Drawing

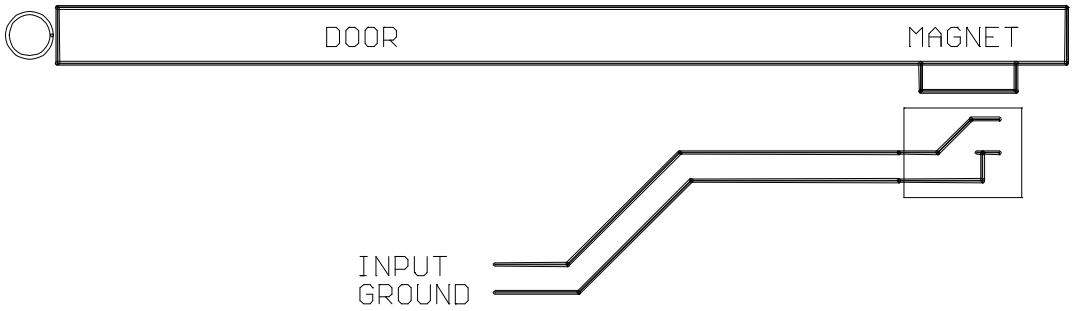

Logical Latched Output Lines

The RLC-1 offers 5 logical control lines for site control. Because the output lines are open collector, the user will not measure any voltage on the output lines, only an open or a ground. In order to check the condition of the control lines, a meter set to resistance will be needed. The meter will read an open when the control line is off and a virtual ground when the control line is on. When using a semiconductor device as a latch, certain current limitations are imposed. The Output used can sink (apply a ground), of 150mA. If this current is exceeded, the Output will short and destroy the device. See figure below on how to connect a relay to one of the output lines. (See Command Listing for output control line commands).

Output Line Relay Driver Drawing

This figure shows correct relay driving using one of the 8 output lines on the controller. It is important to have a flyback dioide across the relays coil for inductive pulse protection.

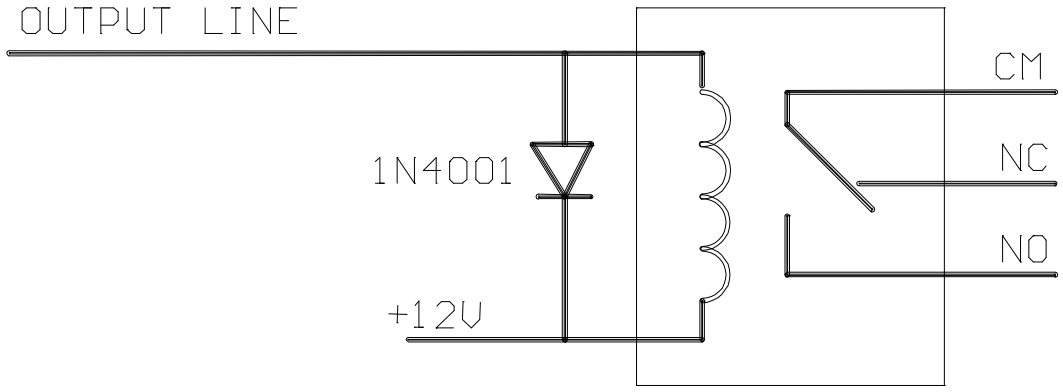

Logical Input Lines

The RLC-1 offers the user 4 logical input lines. These lines recognize an open/ground input change. These lines are internally pulled up to +5 Volts and zener diode clamped to 5 Volts. This allows direct interface to higher voltage inputs that do not exceed +15 Volts. The application to site users is great: door open/closed magnetic contacts, local site controlled switches, and site power monitoring relays. See figures below for some circuit installation procedures. These are just a few of the applications that the logical input lines can be used for.

Input line reading AC power fail Drawing

This figure shows the correct way of hooking-up an AC fail alarm relay used to indicate AC failure. When the AC is present the relay contact will be closed. This will indicate to the controller a logic low is normal (AC is present), and a logic high is alarm (AC is not present).

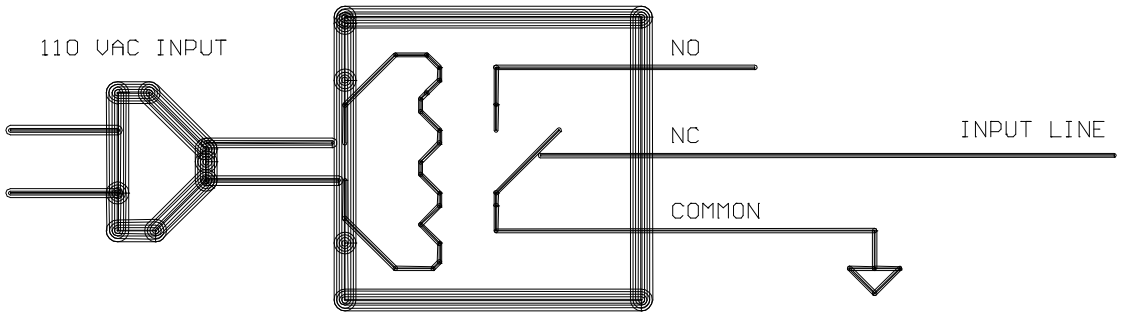

Chapter 11: Doug Hall RBI-1, RLC-ICM and Misc.Remotes

The following commands deal with the Doug Hall Electronics RBI-1, and the Link Communications Inc. RLC-ICM interface controllers. The last commands in this section deal with serial and pulse remote base formats.

Doug Hall RBI-1 Interface

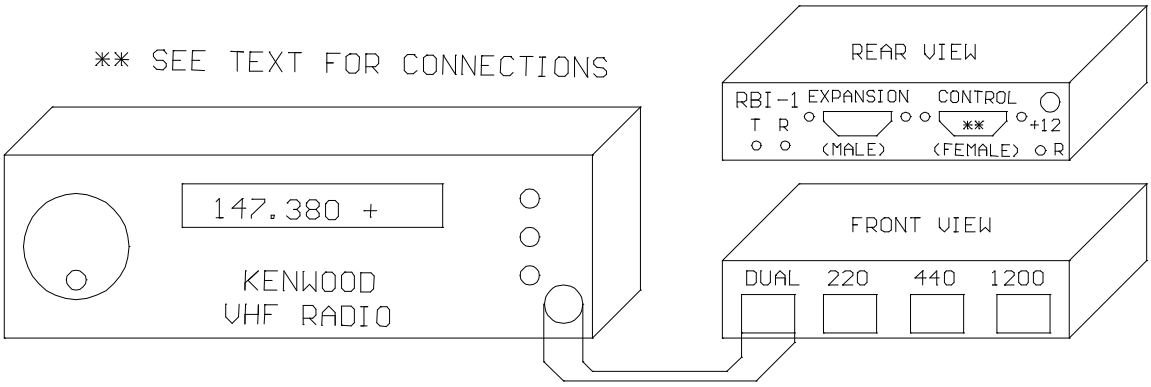

A Brief Description on how to use: Remote Base Functions

The RLC-1 can control many common remote base radios. The controller can directly control ICOM and Kenwood HF radios. Control of Kenwood mobile radios is accomplished using the Doug Hall Electronics RBI-1 (See Remote Base section of the manual for Doug Hall RBI-1 information). ICOM IC900/901 band modules are supported using the Link Communications RLC-ICM interface. BCD and channel selected remotes are also supported.

HF Remote Bases:
The RLC-1 will directly control most ICOM and Kenwood HF radios that have an RS-232 interface available. Control of the remotes is accomplished using the RLC-1 RS-232 serial port. The serial port can also be used by your terminal, modem or TNC. When interfacing the Audio, COR and PTT inputs, a link port must be used.

Doug Hall RBI-1 Remote Base:
The RLC-1 will control an external Doug Hall RBI-1 interface using 3 of its output lines. Interfacing the RBI-1 is accomplished by using Outputs 5,4,3. The output lines will shift the needed data out to the RBI-1 which will then control the attached radio. Most features of the radio are supported like PL frequency, encode/decode, frequency, offset, memory, radio power, and power level. The RBI-1 will support 4 bands (2M, 220, 440, 1.2Ghz.). Link Communications Inc. only supports the RBI-1. You can purchase the interface from Doug Hall Electronics. (See Remote Base section for order information).

Link Communications RLC-ICM Remote Base Interface:
The RLC-1 supports the RLC-ICM interface using 3 of its output lines. The RLC-ICM allows remote control of the ICOM IC900/901 band modules. The RLC-ICM supports 5 bands (10M, 6M, 2M, 220, 430-440). The interfacing of the RLC-ICM is accomplished using Outputs 5,4,3. These lines contain the data to control the interface. Contact Link Communications Inc. for more on the RLC-ICM.

Serial BCD data:
The RLC-1 supports serial shifting BCD data using 3 of the output lines. The user can enter up to 20 digits to be shifted out. Outputs 5,4,3 are used to shift the data out. An external shift register is needed to decode the serial data into parallel data.

Parallel BCD data:
The RLC-1 supports parallel shifting BCD data using 4 of the output lines. The user can enter up to 20 digits to be shifted out. Outputs 1,2,3,4 are used to shift the data out. An external shift register is needed to decode the multiple parallel data into usable data. The common use for this type of data is in channel selectable radio that require 4 bits to be set to access 16 channels.

095: Enter Frequency Plus Offset for RBI-1, RLC-ICM

This command allows the entry of frequency plus offset data for the RBI-1 and the RLC-ICM remotes. Other features like power, memory, PL are entered in separate commands.

<095> *xxxxxx y*

Parameters:
XXXXXX is the actual frequency
- 29.600 simplex is entered as 296002 (Voice: 29<point>60 S)
- 147.380 plus is entered as 1473801 (Voice: 147<point>38 plus)
- 1290.00 minus is entered as 12900000 (Voice:1290<point>00 minus)

Y is the offset

Offset Number	Offset
0	Minus
1	Plus
2	Simplex
3	Minus 20 Mhz in 1200mhz band

Defaults:
There are no defaults for this command

Notes:
- After the frequency data is entered the controller waits the RBI-1 timer (See Command 50,51,52) before sending the data. This allows several items to be changed before the controller sends the batch to the remotes.

Error Codes:
E1 - To much data is present
E2 - Invalid frequency band. Bands can only be
28,29,50,51,52,53,54,140,150,160,220,430,440,1240,1250,1260,1270,1280,1290
E3 - Invalid frequency. Frequency needs to be 3,4,5 digits followed by 3 digits of frequency data followed by the offset data.

(System wide errors are listed in front of the manual)

Example 1:
I want the remote to go to 145.250 - repeater.

095 1452500 D or unkey

Response:
"<Frequency> <Offset>"

096: Set PL Frequency, Encode On-Off, Decode On-Off

This command controls the setting of the PL information, Encode and Decode controls. Other features like power, memory, frequency are entered in separate commands.

<096> *xx y* z

Parameters:

XX is the PL frequency information, (XX) TS-64 PL Frequency Table (RLC-ICM Only)

Tone #	Frequency	Tone #	Frequency	Tone #	Frequency
00	250.3	22	156.7	44	177.3
01	233.6	23	146.2	45	183.5
02	218.1	24	136.5	46	189.9
03	203.5	25	127.3	47	196.6
04	186.2	26	118.8	48	199.5
05	173.8	27	110.9	49	206.5
06	162.2	28	103.5	50	229.1
07	151.4	29	94.8	51	254.1
08	141.3	30	82.5	52	44.4
09	131.8	31	71.9	53	39.6
10	123.0	32	63.0	54	37.9
11	114.8	33	58.8	55	36.6
12	107.2	34	56.8	56	35.4
13	100.0	35	54.9	57	33.0
14	88.5	36	53.0	58	97.4
15	77.0	37	51.2	59	91.5
16	241.8	38	49.2	60	85.4
17	225.7	39	47.5	61	79.7
18	210.7	40	69.4	62	74.4
19	192.8	41	159.8	63	67.0
20	179.9	42	165.5	....	....
21	167.9	43	171.3	....	....

(XX) RBI-1 Kenwood Frequency Table (RBI-1 Only)

Tone #	Frequency	Tone #	Frequency	Tone #	Frequency
00	67.0	14	110.9	28	179.9
01	71.9	15	114.8	29	186.2
02	74.4	16	118.8	30	192.8
03	77.0	17	123.0	31	203.5
04	79.7	18	127.3	32	210.7
05	82.5	19	131.8	33	218.1
06	85.4	20	136.5	34	225.7
07	88.5	21	141.3	35	233.6
08	91.5	22	146.2	36	241.8
09	94.8	23	151.4	37	250.3
10	97.4	24	156.7	....	....
11	100.0	25	162.2	....	.....
12	103.5	26	167.9	....	....
13	107.2	27	173.8	....	....

Y is the PL Encode (Generate) control
- 1 - Encode PL on Transmit
- 0 - Cancel PL Encode

Z is the PL Decode (Receive) control
- 1 - Require PL on Receive
- 0 - Cancel PL Decode requirement

Defaults:
PL tone set to 00, encode and decode are off.

Error Codes:
E1 - Invalid PL frequency (See Tables above)
E2 - Invalid PL encode mode
E3 - Invalid PL decode mode

(System wide errors are listed in front of the manual)

Example 1:
I want PL encode and decode enabled with a PL of 100.0Hz. I am using an RBI-1 interface

```
096 11 1 1 D or unkey
```

Response:
"PL <PL number> Transmit <ON> Receive <ON>"

097: Recall Memory Channels on RBI-1

This command only is available on the RBI-1 interface running version 3.XX RBI-1 software. This command will recall memory channels 01..20.

<097> *xx*

Parameters:
XX is the memory channel number 01..20

Defaults:
There are no defaults for this command

Notes:
- Only RBI-1's running version 3.XX software support this feature. The RLC-ICM does not support this feature.

Error Codes:
E1 - Invalid memory channel
(System wide errors are listed in front of the manual)

Example 1:
I want to recall the weather channel on my Kenwood TH-241. I pre-programmed the memory into number 08.

097 08 D or unkey

Response:
"Radio Look-Up <Memory Channel>"

098: Set Power on the RBI-1

This command allows the user to change the power levels on the RBI-1. This command is not supported on the RLC-ICM interface. The power on the RLC-ICM is set using a jumper block on the radio interface module.

<098> *x*

Parameters:
X is the power control function
- 0 - Low Power
- 1 - High Power
- 2 - Medium Power

Defaults:
Power defaults to low

Notes:
- The RLC-ICM does not support this feature.

Error Codes:
E1 - Invalid power level

(System wide errors are listed in front of the manual)

Example 1:
I need to increase my remote to high power to get into a distance repeater

098 1 D or unkey

Response:
"Power at <Power Level>"

099: Turn RBI-1 Radio Band Power On-Off

This feature allows an unused module to be turned off. The module selected is the last module that frequency data was sent to. This feature is not supported on the RLC-ICM interface.

<099> *x*

Parameters:
X is the power control function
1 - Turn the radio module power ON
0 - Turn the radio module power OFF

Defaults:
All modules power is ON

Notes:
- The RLC-ICM does not support this feature.

Error Codes:
E1 - Invalid power control level
(System wide errors are listed in front of the manual)

Example 1:
I want to shut off my 2 meter module that I just finished using.

099 0 D or unkey

Response:
"Radio Power <ON/OFF>"

100: Reset External Interface

This command allows an external reset of the remote base interface. When the controller resets it automatically resets the external interface. This command is used when control is lost with the external interface.

<100>

Parameters:
There are no parameters for this command

Defaults:
There are no defaults for this command

Error Codes:
(System wide errors are listed in front of the manual)

Example 1:
I seem to have lost communications with my RBI-1. I need to remotely reset is to regain control.

100 D or unkey

Response:
"Radio Start"

101: Configure the RLC-ICM Module

This command pertains only to the RLC-ICM interface. Because there are so many radio modules that the RLC-ICM supports with different modes, offsets, and functions a special set-up command is needed to simplify the configuration of this interface.

<101> *x ss*

Parameters:

X is the band module requested

1 - Module is plugged into connection 1
2 - Module is plugged into connection 2
3 - Module is plugged into connection 3
4 - Module is plugged into connection 4

SS is the set-up code to assign to the requested module
(It may be necessary to assign several set-up codes to each module)

- First you need to assign what frequency module is plugged into what slot

SS (the setup code)	Description
00	28 Mhz Module
05	50 Mhz Module
10	140..160 Mhz Module
15	220 Mhz Module
20	430..440 Mhz Module
25	1200 Mhz Module (not currently active)

- Second, you must tell each band module what size of offset to use when you select a plus or minus offset with Command 095.

SS (the setup code)	Description
30	100 KHz Offset
35	500 KHz Offset
40	600 KHz Offset
45	1 Mhz Offset
50	1.6 Mhz Offset
55	1.7 Mhz Offset
60	5 Mhz Offset

65	12 Mhz Offset
70	20 Mhz Offset

- Setup codes 75 and 80 are reserved for special offset memories, which are not yet supported.

- Once you have a frequency into the module you use the below setup codes disable and enable transmitting on individual modules:

SS (the setup code)	Description
85	Transmit and Receive Enabled
90	Transmit Disabled (receive only)
95	Transmit and Receive Disabled (module turned off)

- If you have properly entered the above commands, the RLC-Icom is set up and ready to use. To enter frequencies, turn PL on and off, etc., use the RBI-1 commands in this section of the manual.

Defaults:
Refer to your RLC-ICM manual for defaults

Error Codes:
E1 - Invalid module requested
(System wide errors are listed in front of the manual)

Example 1:
I want to assign 140 module to slot 3, then assign a 600 kHz offset used on that module.

101 3 10 D or unkey

Then

101 3 40 D or unkey

Response:
"Radio Set-up Complete"

102: Recall Frequency

This command recalls the frequency last entered into the controller.

<102>

Parameters:
There are no parameters for this command

Defaults:
There are no defaults for this command

Notes:
- This command only **currently** recalls the last frequency entered into the controller. A future release will allow you to recall the frequency of a specific band.

Error Codes:

(System wide errors are listed in front of the manual)

Example 1:
I want to recall what the last frequency entered was

102 D or unkey

Response:
"<Frequency> <Offset>"

103: Recall All Remote Variables

This command allows all set-up features to be recalled.

<103>

Parameters:
There are no parameters for this command

Defaults:
There are no defaults for this command

Notes:
- This command only **currently** recalls the last features entered into the controller. A future release will allow you to recall the features of a specific band.

Error Codes:
(System wide errors are listed in front of the manual)

Example 1:
I want to recall what is entered for the remote

103 D or unkey

Response:
1) "<Frequency> <Offset>"
2) "PL <PL Tone> Transmit <ON/OFF> Receive <ON/OFF>"
3) "Radio Look-Up <Memory Channel>"
4) Power At <Power Level>"
5) Radio Power <ON/OFF>"

104: External Serial Data Send - Parallel BCD Controller

This command serially sends data out 2 output lines for support of external serial --> parallel controllers. This command is used to expand the output lines, external BCD controller support, and any function that requires serial data.

<104> *x..x*

Parameters:
X..X are the BCD digits to be sent serially
Output 4 is the serial data
Output 5 is the serial clock
Output 3 can be used as a serial enable/disable function

Defaults:
There are no defaults for this command

Notes:
- This command uses the same output lines as the RBI-1 and RLC-ICM.

Error Codes:
E1 - To much data. This command can handle up to 20 digits of BCD data
(System wide errors are listed in front of the manual)

Example 1:
I want to send 4 digits to my external controller. The data is 5250

104 5 2 5 0 D or unkey

Response:
"Frequency is <Entered Data>"

110: Pulse Output Line 'X' 'Y' Times

This command allows the user to pulse a selected output line, from 1 to 9 times. This feature is used by some radios for remote base support.

<110> *x y*

Parameters:

X is the output line. This number must range from 1..5
Y is the number of times to pulse the output line. This number must range from 1..9

Defaults:

There are no defaults for this command

Error Codes:

E1 - Invalid output line. The output line must be between 1..5
E2 - Invalid pulse number. This number must be between 1..9
(System wide errors are listed in front of the manual)

Example 1:

I need to move my external remote up 7 channels. The output line I use is out 4

110 4 7 D or unkey

Response:

"Out Control <Output Line> <Number of Pulses> Times"

Chapter 11 Examples

Example 11-1: I need to fully configure the RLC-ICM

In order for the RLC-ICM module to operate correctly, the user must fully configure the interface prior to functional operation. Any configured modules that have no radios connected must be disabled from the interface. This example will cover interfacing 3 modules to the RLC-ICM. Modules will be configured differently from what the default configuration is.

Modules for our example:

10 Meters on port 1
6 Meters on port 3
2 Meters on port 4

Note that module 2 has no connection. Also note that none of these modules is correctly connected to the interface.

1) Configure module 1 for 10 meters using Command 101

- 101 1 00 D or unkey ; Voice response "Radio Set-up Complete"

Where (1) indicates module number, (00) indicates 10 meter module

2) Configure module 2 for no radio and turn off module

- 101 2 25 D or unkey ; Voice response "Radio Set-up Complete"

Where (2) indicates module number, (25) indicates no module

-101 2 95 D or unkey ; Voice response "Radio Set-up Complete"

Where (95) disables the modules receive and transmit

3) Configure module 3 for 6 meters

- 101 3 05 D or unkey ; Voice response "Radio Set-up Complete"

Where (05) indicates 6 meter module

4) Configure module 4 for 2 meters

- 101 2 10 D or unkey ; Voice response "Radio Set-up Complete"

Where (10) indicates 2 meter module

- Now the RLC-ICM is ready for operation.
- When the module receives frequency data it puts the selected module into receive only mode.
- Remember to set the RLC-ICM's radio port on the controller to expect active 'LOW' COR signals.

RLC-ICM test points are located on J10. Pin 5 is located closest to the bottom of the board.

* 1) Pin 1 indicates valid frequency data received
* 2) Pin 2 indicates valid set-up data was received
* 3) Pin 3 indicates an error was received in the transmittal

4) Pin 4 provides a 1 sec. on/off pulse
5) Pin 5 provides a ground reference

* Each test point will go from 0v to 5v for 10 seconds if the condition is true

Example 11-2: I want to send several items the RBI-1

I have an RBI-1 interface connected to by RLC-1. The connected radio ports are 2 meter, and 440 Mhz. I need to set-up the radios to some preset values that can be easily called from the controller. I will use macro 45 to set-up to 2 meter module and macro 46 for the 440 module. The 2 macros can not be called at the same time due to serial data overrun. They can be called separately by a user.

1) 2 meter module
- Set the frequency to 147.380 plus offset
- Set PL frequency from 100 hertz, receive pl off, transmit pl on
- Set High power
- Turn module power on

2) 440 module
- Set the frequency to 444.500 plus offset
- Set PL 100 hertz, receive pl off, transmit pl off
- Set Low power
- turn module power off

3) 2 meter modules macro 45

- 127 45 D or unkey	; Clear module 45
- 130 45 045 435 507 002 314 D or unkey	; Voice 'Set Up 2 Meter
- 130 45 131 D or unkey	; Cancel responses
- 130 45 095 147380 1 D or unkey	; Set the frequency and offset
- 130 45 096 25 1 0 D or unkey	; Set the PL to 100hz
- 130 45 098 1 D or unkey	; Set high power
- 130 45 099 1 D or unkey	; Turn the radios power on

4) 440 Mhz modules macro 46

- 127 46 D or unkey	; Clear module 46
- 130 46 045 435 507 004 022 D or unkey	; Voice 'Set Up 440
- 130 46 131 D or unkey	; Cancel responses
- 130 46 095 444500 1 D or unkey	; Set the frequency and offset
- 130 46 096 25 0 0 D or unkey	; Set the PL to 100hz
- 130 46 098 0 D or unkey	; Set low power
- 130 46 099 0 D or unkey	; Turn the radios power off

The user can now execute macro 45,46 to set-up the 2 meter and 440 remotes on the RBI-1.

Building a cable to interface the RLC-ICM/RBI-1 Interfaces

The cable used to communicate with the RLC-ICM/RBI-1 consists of 2 cables summed into a single connector that connects to the interface.

Cable 1 is the audio cable

Pin 1 **Ground Pin 9**
Pin 2 No Connect
Pin 3 **PTT Pin 8**
Pin 4 **Audio Out Pin 5**
Pin 5 **Audio In Pin 6 ***
Pin 6 No Connect
Pin 7 **COR Pin 7**
Pin 8 No Connect
Pin 9 No Connect

Cable 2 is the serial data cable (DB-25 I/O Connector)

Pin 1 Ground
Pin 2 **Reset Pin 1** (Output 3)
Pin 3 **Clock Pin 4** (Output 5)
Pin 15 **Data Pin 3**

* Audio on the RLC-ICM is discriminator audio. User must install appropriate audio de-emphasis jumper.

* Audio on the RBI-1 is non-discriminator audio. User must remove appropriate audio de-emphasis jumper.

The female DB-9 on the RLC-ICM/RBI-1 is used to pass data into the interface. The above tables '**bold**' typeface indicates what connections are made to this connector. Pin #2 will not be connected on this connector. The **COR** output from the RLC-ICM is low when active. The COR output from the RBI-1 is high when active. All other signals can be interfaced without any special consideration.

Doug Hall RBI-1 Information

The following is the Doug Hall Electronics information available for the RBI-1 remote base interface. Link Communications inc. does not sell the RBI-1 interfaces, only supports the interface in the software. For more information on the RBI-1 contact Doug Hall Electronics at the below address or phone number.

Doug Hall Electronics
815 E. Hudson St.
Columbus, Ohio 43211
VOICE: +(614)261-8871
FAX: +(614) 261-8805

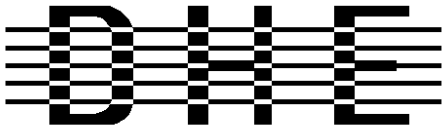

Doug Hall Electronics
815 E. Hudson St.
Columbus, Ohio 43211
VOICE: +(614)261-8871
FAX: +(614) 261-8805

INTRODUCTION

The DHE Remote Base Interface (RBI-1) Adapts the Kenwood series TM-X21 and TM-X31 mobile radios to several brands of Repeater Controllers. The RBI model 1 converts the serial data stream from the Controller and Directly controls the Kenwood Mobile radio. All connections to the Kenwood radio are made thru the microphone jack. In the maximum configuration using a Kenwood TM-701 Dual Band Mobile you can control Frequency,CTCSS encode On/Off, RF power level, Offset, Power On/Off, and Band. This is all still accomplished thru the microphone jack.

The RLC-2 Format supports the following functions:
Full frequency control, 4 ports/radios, and 4 bands.
Transmitter power HI/MED/LOW
CTCSS Frequency select, Encode on/off, Decode on/off.
-20 and -12 Mhz offsets on 1200.
Memory Recall of 20 channels

The Supported Kenwood Mobile Radios are as follows:

140	220	440	1200	DUAL	
TM-221	TM-321	TM-421	TM-521	TM-621+	TM-721+
TM-231	TM-331	TM-431	TM-531	TM-631+	TM-731+
TM-241		TM-441	TM-541		TM-701+

+ Dual Banders

Copyright (c) 1996 Doug Hall Electronics.
All Rights reserved
Specifications subject to change without notice

SPECIFICATIONS

Microprocessor: INTEL 87C51 Series 12MHz

Connections:

Power: RCA Phono + center pin.
Controller: 9 Pin female "D" Connector
Expansion: 9 Pin male "D" connector.
Radios: 4 8 Pin Modular Compatible with Kenwood PG-4H cable.
1 PG-4H provided. Additional cables available from Kenwood or DHE.

Adjustments: "T" (VR1) Radio transmit audio level adjust.
"R" (VR2) Radio receive audio level adjust.

Audio: Radio Transmit 0.050V to 2.5V Input
Impedance 15K.
Radio Receive 0.020V to 2.5V Output
Impedance 5K.

"S" Meter output: 0 to +5V 0V = no signal, 5V = > "S" 9.
Output impedance approx 5K.

Expansion output: 8 outputs, ground active, Sink 500mA each, 1A maximum total.

Power Requirements: +10 to +14 Vdc @ 23mA.

Size: 1.5" X 5.1" X 5.5"

Copyright (c) 1996 Doug Hall Electronics.
All Rights reserved
Specifications subject to change without notice.

INSTALLATION

Place or mount the RBI in close proximity to the Kenwood mobile radio to be used. Connect the RBI with the provided PG-4H Cable from the 8 pin modular jack marked "RADIO" to the Kenwood Microphone jack. Only Port 1 (140/DUAL) will support a Dual Band radio. Port 1 is the only Port the 140 Mhz radio can be connected.

The RBI will support all 4 bands (140/220/440/1200) as follows:
If Port one is filled, Port 2 is for 220 only, Port 3 is for 440 only, Port 4 is for 1200 only. Basically, if the selected band is unavailable on Port 1 it will go to the port hard assigned to that band.

J2	Line Name	RLC-1 Connections
1	RBI-1 RESET	2 RLC-1 Output #3, P5 (DB-25 I/O Connector)
2	"S" Meter output	(Analog Input for Signal Strength)
3	Data	15 RLC-1 Output #4, P5 (DB-25 I/O Connector)
4	Clock/Strobe	3 RLC-1 Output #5, P5 (DB-25 I/O Connector)
5	Kenwood TX Audio (T Pot)	4 RLC-1 Link Connector Port
6	Kenwood RX Audio (R Pot)	5 RLC-1 Link Connector Port
7	COS from Kenwood RX	7 RLC-1 COR Input (Must select Active High COR)
8	PTT to Kenwood TX	3 RLC-1 PTT Output
9	Ground	1 RLC-1 Ground Connection (On Link Ports Only)

Audio receive level from the Kenwood to the Controller is controlled by VR2 (R). The audio level from the Controller to the Kenwood is adjusted by VR1 (T). Refer to your manuals for additional adjustments in your controller.

RADIO SETUP

The Kenwood radio's need certain parameters setup before they can operate from the RBI. Things such as STEP, etc. Since the memory channels in the radio aren't used we will reset the radio to default on all setup options. This can be found in your Kenwood operating guide.

TM-701	Hold the MR key down during power on to reset.
TM-X21	Hold the VFO/M and M.IN keys down during power on to reset.
TM-621/721	Hold the F key down during power on to reset.
TM-631/731	Hold the MR key down during power on to reset.
TM-X31	Hold the MR key down during power on to reset.
TM-X41	Hold the VFO key down during power on to reset.

Copyright (c) 1996 Doug Hall Electronics.
All Rights reserved
Specifications subject to change without notice.

RADIO SETUP CONT...

- Set the step size to 5KHz. (25Khz on 1200 Mhz units)
- Set dual band radio's to single band.
- Set power to desired setting. Remember, remote base transmitters can have a high duty cycle because it will be transmitting during all activity on the Repeater side. The mobile radio's used in a remote base configuration should be set to low power in most cases.
- Set VFO/MEM to VFO for external frequency input.
- Set CTCSS for desired frequencies. When using TM-X31/X41 series it will be set by the controller and will override your initial setting.
- Set CTCSS Decode to off.
- Set ABC and AL to off on models that support it.
- Turn off Repeat functions.

- Once these have been set, connect the Mike jack to the RBI. Reset the RBI to initialize the radio to the controller and get them in sync.
- Any time there is manual changes from the radio front panel, the RBI and the Radio can get out of sync. This will require a RBI reset to correct. We recommend hooking the reset line from the RBI to a toggled User function output.
- Initialize the User function to "1" on and save those in all your Macro's or the reset line will be held low and disabled. To reset just interrogate the user function, this will toggle the reset line and reset the RBI.

SUPPORT CROSS REFERENCE

FUNCTION	CTCSS ENCODE	CTCSS SELECT	CTCSS DECODE	MULTI BAND	RF PWR POWER
GENERIC	Y	Y	Y	Y	Y
KENWOOD					
TM-X21	Y	N	N		N
TM-X31	Y	Y	Y		Y
TM-X41	Y	Y	Y		Y
TM-621/721	Y	N	N	Y	N
TM-631/731	Y	N	N	Y	N
TM-701	Y	Y	Y	Y	Y

Copyright (c) 1994 Doug Hall Electronics.
All Rights reserved
Specifications subject to change without notice.

Chapter 12: HF Remote Base Radio

This chapter deals with the operation of the HF remote base controller. The controller is generic between radios. Only the software type differs between Icom, Kenwood, Yaseu.

Connection to the RLC-1 for a Serial radio

The RLC-1 supports frequency programming of a remote HF radio (Icom or Kenwood). The interfacing to these radios is accomplished using the RLC-1 serial port. It is important to connect both the RX and TX lines to your radios RS-232 port. Do Not Connect the RLC-1 RS-232 port directly to your TTL input of your radio or damage to the RLC-1 and your radio serial interface will occur. The serial radio interface was tested on an Icom IC-725, a Kenwood TS-450 and a Yaesu FT-900AT.

105: HF Mode Configure

This command configured what port the HF remote base is on along with assigning the first digit of the remote prefix.

<105> *x y*

Parameters:
X is the port the HF remote base is connected to
1 - Port 1
2 - Port 2

Y is the remote prefix used when in remote base mode

Defaults:
(X) is Port 2
(Y) is '1'

Error Codes:
E1 - Invalid radio port
(System wide errors are listed in front of the manual)

Example 1:
I want the remote base assigned to port 2 with the remote prefix being a '1'

105 2 1 D or unkey

Response:
"Remote is on <Port> with input <Prefix>"

106: HF Mode Enable

This command enables the HF remote base mode. This mode re-defines the DTMF keyboard into a quick HF remote access pad. When this mode is enabled, only HF commands can be entered. In order to execute any system wide commands the user must get-out of the HF mode.

<106>

Parameters:
There are no parameters for this command

Defaults:
HF mode is disabled

Notes:
- Once HF mode is enabled the calling ports DTMF data is re-defined for HF operation

Error Codes:
(System wide errors are listed in front of the manual)

Example 1:
I want to enable HF mode

106 D or unkey

Response:
"Remote Base On"

HF Remote Base Keypad

Keypad Definition

1 Remote in **receive only** mode or Select **HF Mode #**	**2** Remote in **receive and transmit on** mode	**3** **Receive and transmit off**. Cancels HF mode	**A** Bump **Up** Remote 20HZ
4 Bump **Down** Remote 100HZ or Execute an External Command ### (000..245)	**5** **Recall Memory** Channel ## 00..99 or Select **VFO A**	**6** Bump **Up** Remote 100HZ	**B** Bump **Down** Remote 20HZ
7 Bump **Down** Remote 500 HZ or **Start Scan #**	**8** **Recall Frequency** of current VFO or **Select Offset**	**9** Bump **Up** Remote 500HZ	**C** Not Defined
*** Frequency <Point> Key **.**	**0** **Write Memory** Channel ## or Select **VFO B**	**#** Force Execution Digit **Enter**	**D** Not Defined

Special Definitions:

HF Mode (See Keypad 1):

HF Mode Number	Definition
1	Selects USB Mode
2	Selects LSB Mode
3	Selects AM Mode
4	Selects FM Mode

Start Scan (See Keypad 7)

Scan Number Entered	Scan Mode Requested
1	Scan Down Slow (20HZ Steps)
3	Scan Up Slow (20HZ Steps)
4	Scan Down Medium (100HZ Steps)
6	Scan Up Medium (100HZ Steps)
7	Scan Down Fast (500HZ Steps)

9	Scan Up Fast (500HZ Steps)

HF Prefix:

The HF prefix is a single digit that is configured with Command 105. This digit is always the first digit entered when any HF mode is executed. The reason for the prefix digit is to keep single digit entries from accidentally being entered.

Example: I am in HF mode and need to start the scan function for fast up scanning
Enter: 1 79 '#' or unkey Response: 'Scan 9'

Example: I am in HF mode and need to enter a frequency
Enter: 1 29*600 '#' or unkey Response: '2 9 point 6 0 0 0 0'

Example: I am in HF mode and need to recall memory 15
Enter: 1 515 '#' or unkey Response: 'Look-up 15'

In all these example the format for data entry was:
<HF Prefix> <Command> <Addition Data if Needed> <# or unkey>

HF Frequency Entry:

The frequency is entered immediately following the HF prefix. There is no command to tell the controller to take frequency, simply no command means frequency. The controller will take frequency input from 1 mhz (1*00000) up to 999.99999 mhz (999*99999).

Typical HF remote base session:

HF Prefix is '1'

1) 106 D or unkey ; Enable HF remote mode
2) 1 29*68 # or unkey ; Move the HF remote to 29.680 mhz, VFO 'A'
3) 1 0 # or unkey ; Select VFO 'B'
4) 1 29*58 # or unkey ; Move the HF remote to 29.580 mhz, VFO 'B'
5) 1 5 # or unkey ; Select VFO 'A'
6) 1 8 1 # or unkey ; Select Split (Repeater Mode)
7) 1 2 # or unkey ; Go into transmit and receive mode
.
.
.
1 3 # or unkey ; Cancel HF mode after communications are complete

107: HF Mode Disable

This mode turns off the HF remote. The only real use for this command is giving other ports the ability to cancel the HF remote on the port that is currently using the remote functions. Because the command <HF Prefix> <3> cancels the remote function on the port that is using the remote, this command is for control only.

<107>

Parameters:
There are no parameters for this command

Defaults:
There are no defaults for this command

Error Codes:
(System wide errors are listed in front of the manual)

Example 1:
The user on port 1 did not cancel the HF remote. I can not reach port 1 but do have access to port 2. I need to cancel the remote function so control is returned to normal.

107 D or unkey

Response:
"Remote Off"

108:Enter HF Radio Address and Radio Type

This command is required when using ICOM HF radios. Because the Icom radios can co-exist on a common serial bus (CI-V) a radio address is needed to select what radio gets the serial data. The list below shows the radios address table.

If a Kenwood series radio is used this command selects what type of radio your remote is. The default radio is the TS-450 and later models. For earlier radios see the table below for the correct formatting.

<108> *xxx y*

Parameters:
XX is the radios address. This number must be between 000..255 (Entered in Decimal Format)
Y is the radio type

1 - Icom Radio Connected
2 - Kenwood Radio Connected
3 - Yaesu Radio Connected

Defaults:
Address (XX) set to 00. (Can not find your address?? Consult you radio manual)

Radio Address	Radio Type	Radio Address	Radio Type
000	Kenwood	TS-450 and	Later radios
001	Kenwood	TS-940	Only radio
002	Kenwood	TS-440 and	Earlier radios
004	IC-735	34	IC-471 A/E/H
008	IC-R7000	36	IC-1271 A/E
016	IC-275 A/E/H	38	IC-781
018	IC-375 A	40	IC-725
020	IC-475 A/E/H	42	IC-R9000
022	IC-575 A/H	44	IC-765
024	IC-1275 A/E	46	IC-970 A/E/H
026	IC-R71 A/E/D	47	IC-706
028	IC-751 A	48	IC-726
030	IC-761	50	IC-R72
032	IC-271 A/E/H	52	IC-R7100

Error Codes:
E1 - Invalid remote address

(System wide errors are listed in front of the manual)

Example 1:
I want to set my radios address for the Icom IC-725

108 040 1 D or unkey

Response:
"Radio Is <Radio Address>"

Example 2:
I have a Kenwood TS-440 radio and need to select the correct mode for my radio

108 002 2D or unkey

Response:
"Radio Is <Radio Address>"

Special Note:
If you are going to run an HF remote base you need to make sure the controller supports your radio type. You must tell the RLC-1 the type of HF radio used. This is the last digit of the additional data required by this command. The controller then formats the serial data to match the radio selected.

109: Command Line Control of the HF Routines

This command has the same function as Command 106 except you do not need to be in HF mode to access the HF commands. This command allows macros and scheduler events to access, set-up and function the remote's features. The format of this command is the same as Command 106.

<109> *x y..y*

Parameters:
X is the HF prefix
Y..Y are the functions that can be accessed using Command 106

Defaults:
There are no defaults for this command

Notes:
- Refer to Command 106 for the keystroke definitions.
- The 'point' key (*) in Command 106 is redefined to the 'pound' (#) key. This change is needed so the 'point' in the frequency will not interfere with other controller functions.

Error Codes:
(System wide errors are listed in front of the manual)

Example 1:
I want to set the remotes frequency to 14.250. My HF prefix is '1'

109 1 14#250 D or unkey

Response:
Refer to Command 106

Chapter 12 Examples

Example 12-1: I need a macro to set-up the HF remote up

The controller supports the user to enter and control the HF remote base system without actually entering into HF mode. Command 109 is provided as the command line entry of commands into the HF mode executer.

This example was tested on an Icom IC-725 interface. Other radio types may vary in operation and set-up.

- I want to set the frequency to 29.680 on VFO A, this will be my receive frequency
- I want to set the frequency to 29.580 on VFO B, this will be my transmit frequency
- I want to enable split mode

For the example the 'HF Prefix' is the default '1'. We will use macro 20 to store this example.

1) Clear the HF macro
   - 127 20 D or unkey ; Clear macro 20

2) Send the message
   - 130 20 045 020 009 006 008 361 D or unkey ; '29 point 5 8 repeater'

3) Cancel responses
   - 130 20 131 D or unkey ; Cancel Responses

4) First frequency
   - 130 20 109 1 29#68 D or unkey ; Frequency at 29.680

5) Select VFO 'B'
   - 130 20 109 1 0 D or unkey ; Select VFO 'B'

6) Second Frequency
   - 130 20 109 1 29#58 D or unkey ; Frequency at 29.580

7) Select VFO 'A'
   - 130 20 109 1 5 D or unkey ; Select VFO 'A'

8) Turn on Split Mode
   - 130 20 109 1 8 1 ; Enables Split Mode

This macro sets-up the remote to operate on 29.680/29.580 in repeater mode.

HF Radio Interfacing

The RLC-1 supports connection of your HF's serial port to the RLC-1's serial port. The RLC-1 requires RS-232 levels, but your radio usually requires TTL levels. This requires an external RS-232--TTL level translator. With this external interface the RLC-1 is happy to see the correct levels and your radio is happy to see the TTL levels. Do not hook your HF radio directly to the RLC-1 without a level translator.

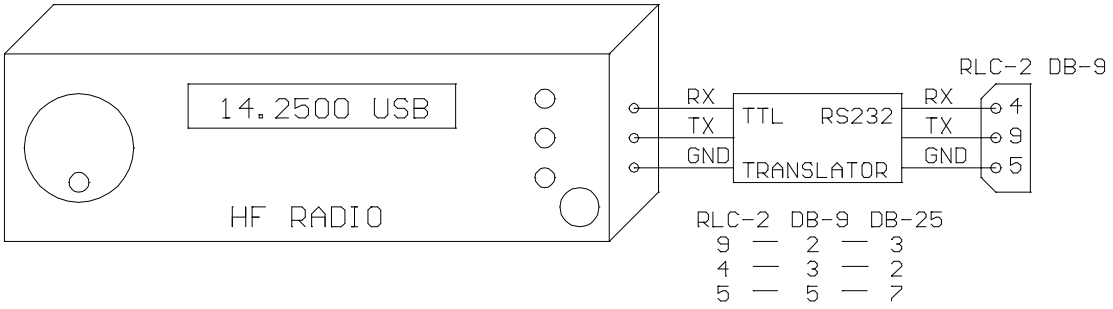

Chapter 13: Pre-Access Code Set-up

This chapter deals with the pre-access code system supported on the controller. This code system allows the system to be configured for 1,2,3 code access from the links, and a 'D' access from the repeater ports. This coding is common for large linking systems.

120: Assign the 3 Ports Link Prefixes

This command assigns the link port prefix codes. These prefix codes are only used when the controller is in pre-access mode. The repeater prefix code is always 'D'

<120> *x yyy*

Parameters:
X is the port to assign the prefix digits.

Pre-Access Number	Port Name
1	Port 1
2	Port 2

YYY is the new prefix code. This code can be any of the DTMF digits except the 'Forced Execution Digit'.

Defaults:
Port 1 defaults to '#97'
Port 2 defaults to '#98'
Port 3 defaults to '#99'

Notes:
- Refer to the timer commands 050,051,052 to control the pre-access timer and dial tone generation length.

Error Codes:
E1 - Invalid radio port

(System wide errors are listed in front of the manual)

Example 1:
I want to change port 1's code to 93#

120 1 93# D or unkey

Response:
"<Port> Code is <New Prefix Code>"

121: Configure Pre-Access on a Port

This command configured how pre-access works on each port. This command controls dial tone generation requirements and the dial tone response frequency for a port.

<121> *w x* yyyy zzzz

Parameters:
W is the port number. This number must range from 1..2
X is the dial tone response control
0 - No dial tone generated
1 - Dial tone generated on valid pre-access code receipt
YYYY is the first tone of the dial tone response
ZZZZ is the second tone of the dial tone response

Defaults:
All ports dial tone generation is disabled (off)

Error Codes:
E1 - Invalid port. Number must range between 1..2
E2 - Invalid mode. Mode must be either a 0,1
(System wide errors are listed in front of the manual)

Example 1:
I want my port 3 to generate a dial tone when selected. This means the dial tone will begin when the correct pre-access code is received.

121 3 1 0440 0350 D or unkey

Response:
"Code Set Up Radio <Port> Dial <ON\OFF>Frequency <Tone1> and <Tone2>"

122: Enable/Disable Pre-Access on a Port

This command enables or disabled pre-access on a specific port. When pre-access is enabled the port requires the pre-access code be received before any commands can be executed.

<122> *x y*

Parameters:
X is the port number. This number must range from 1..2
Y is the control variable
0 - Disables pre-access
1 - Enables pre-access

Defaults:
All ports pre-access default off

Notes:
- When a repeater is in pre-access the code for access is 'D' not the pre-access code. This code only applies when the port is in a link mode. Repeaters will not generate the dial tone.

Error Codes:
E1 - Invalid port. Number must range between 1..2
E2 - Invalid mode. Mode must be either a 0,1
(System wide errors are listed in front of the manual)

Example 1:
I need to enable pre-access on port 2

122 2 1 D or unkey

Response:
"Code Input <ON/OFF>"

123: Pre-Access Configure for the Stop Access Mode

This command configured how the pre-access condition is controlled. In order to stop access into the controller certain link groups use different conditions. We have incorporated 3 into the controller.

<123> *x y* z

Parameters:
X is the stop access condition when a command is executed correctly
- 0 - Disables this feature
- 1 - Enables this feature

Y is the stop access condition when a command is executed and an error is received
- 0 - Disables this feature
- 1 - Enables this feature

Z is the stop access condition when the commanding receiver drops
- 0 - Disables this feature
- 1 - Enables this feature

Defaults:
X,Y,Z default to disabled

Error Codes:
E1 - Invalid port. Number must be from 1..2
(System wide errors are listed in front of the manual)

Example 1:
I want to enable command execution to stop access.

123 100 D or unkey

Response:
"Code set as <X Variable> <Y Variable> <Z Variable>"

Chapter 13 Examples

Example 13-1: Configuring ports for Pre-access

This example goes through the steps needed for setting up a link port for pre-access. The link will request dial tone upon proper site prefix reception.

1) Define Port 2 site prefix as #34
- 120 2 #34 D or unkey ; Assign port 2 access code as #34

Where (2) is the port defining the pre-access code, (#34) is the site prefix code.

2) Enable dial tone generation for ports 2
- 121 2 1 2856 2271 D or unkey ; Enable dial tone on port 2

3) Enable pre-access on port 1 which is the repeater port
- 122 1 1 D or unkey ; Enable port 1 repeater pre-access on

4) Enable pre-access on port 2. DTMF for this command is coming from port 1
- * 122 2 1 D or unkey ; Enable port 2 pre-access on

Where (*) is port 1's repeater prefix code, (2) is the port number, (1) enables pre-access.

Now data that is entered from the repeater port must begin with the '*' prefix followed by the command and data if any. Once the command is entered and executed the prefix situation may either stop, or continue to be available for user access. See Command 123 for stop access configuration. The controller defaults with the pre-access stop conditions all off. Access will stop when the ports access timer expires.

Example 13-2: Pre-Access Events, Configurations and Uses

Every pre-accessed system is different in its functions and operations. Because of these differences 6 events have been added to the controllers event table (See Command 064) to allow custom configuration of the accessed system. These events can contain custom port-port configurations to match your systems needs

Example #1: I need to disconnect the links from the repeater (Port 1) when port 1 accesses the system and re-connect the links when the repeater un-accesses the system.

- We will use macro #10 for the disconnect macro (Command 151)

1) 127 10 D or unkey or <Enter> ; Delete macro #10
2) 130 10 131 D or unkey or <Enter> ; Cancel all responses for this macro
3) 130 10 002 12 D or unkey or <Enter> ; Disconnect Port 1 from Port 2

- We will use macro #11 for the connect macro (Command 152)

5) 127 11 D or unkey or <Enter> ; Delete macro #11
6) 130 11 131 D or unkey or <Enter> ; Cancel all responses for this macro
7) 130 11 000 12 D or unkey or <Enter> ; Connect Port 1 to Port 2

- We need to assign events

9) 064 077 2 151 01 D or unkey or <Enter>; Assign Command 151 when port 1 starts access
10) 064 079 2 152 01 D or unkey or <Enter>; Assign Command 152 when port 2 stops access

When Port 1 enters a correct pre-access code the start access event for port 1 (077) will request macro 181. This macro disconnects ports 2,3 from the repeater port. When the access for port 1 stops for port 1 (079) macro 182 will be requested. This will re-connect port 1 to port 2,3.

Chapter 14: Macros

Macros refer to commands that can store several commands but can be called with one command. Applications of macros include setting up the repeater into special modes, scheduling events and any type of execution that you want to call with 1 name and no additional data. The controller supports 70 macros with 50 keystrokes per macro.

126: Serial Recall a range of Macros

This command is the same as command 129 except it recalls a range of macros serially. The serial output is in a formatted uploadable format. Simply put your terminal into capture mode and specify the range of macros that you want to view and\or edit. Once you changes are complete you can upload the captured file and the controller will accept the data as a normal entry. This command can be executed from the serial port only.

<126> *xx yy*

Parameters:

XX is the beginning macro to be viewed.
YY is the ending macro to be viewed.

XX and YY must range between 01..70

Defaults:

There are no defaults for this command

Notes:

- XX must be smaller than YY.

Error Codes:

E1 - Invalid execution source. Only serial is enabled to execute this command
E2 - Invalid macro number. Number must be between 01..70
E3 - Macro number mis-match. XX must be smaller than YY

Example 1:

I want to download macros 01..20
From the serial port enter

126 01 20 D or Enter

Response:

ASCII formatted download file

127: Erase a Macro Position

This command erases a macro position. When a position is erased, the macro need to be re-programmed. To just enable/disable the macro, refer to Command 128.

<127> *ss*

Parameters:
SS is the macro number. This number must be between 01..70

Defaults:
All macros are erased

Error Codes:
E1 - Invalid macro slot.
(System wide errors are listed in front of the manual)

Example 1:
I need to erase macro 15 before I reprogram it with new data

127 15 D or unkey

Response:
"Position <Slot Number> Clear"

128: Enable/Disable a Macro Position

This command controls if a macro can be executed. Once a macro is programmed, the user can enable/disable a macro without effecting its contents.

<128> *ss y*

Parameters:
SS is the macro number. This number must be between 01..70
Y is the control variable
0 - Disables the macro
1 - Enables the macro

Defaults:
All macros are erased and disabled

Error Codes:
E1 - Invalid macro slot. Number must be between 01..70
E2 - Invalid mode. Mode must be either a 1 or a 0
(System wide errors are listed in front of the manual)

Example 1:
I need to disable macro 15

128 15 0 D or unkey

Response:
"Position <Slot Number> <ON/OFF>"

129: Recall a Macro Position

This command recalls the programming positions of a macro. Because there can be several commands in a macro with variable lengths of additional data, the user needs to be able to read back the macro position to find what is in the macro. When this command is entered from the serial port the response is formatted in a serially uploadable file.

<129> *ss*

Parameters:
SS is the macro number. This number must be between 01..70

Defaults:
All macros are erased and disabled

Error Codes:
E1 - Invalid macro slot. Number must be between 01..70
E2 - Invalid mode. Mode must be either a 1 or a 0
(System wide errors are listed in front of the manual)

Example 1:
I need to recall macro 15

129 15 D or unkey

Response:
If the macro is erased the response is:
"<Slot Number> is Off, Input is Clear"

If the macro is programmed the response is:
"<Slot Number> is ON,
"Input is <Command Number> With <Additional Data>
"Next input is" ...

If executed from serial
; Macro <Macro Number>
168 <Macro Number> <Command Name> <Additional Data if Any>
.
.
168 <Macro Number> <Command Name> <Additional Data if Any>
; End of the macro

130: Program/Append a Macro Position

This command allows the user to program a macro position and append new commands into a macros. The macro positions can take up to 50 keystrokes per macro. Macros can call other macros up to 10 levels of calling.

<130> *ss xxx y..y*

Parameters:
SS is the macro number. This number must be between 01..70
XXX is the command number. This number must be between 000..215
Y..Y is the additional data for the command if the command requires additional data

Defaults:
All macros are clear and disabled

Notes:
- When counting keystrokes for a macro position
  1) Command numbers (XXX) count as 2 keystrokes, not 3
  2) Additional data digits count as 1 digit per entered digit
  3) Do not have macros call themselves. If this occurs a macro depth limit error will occur.

Error Codes:
E1 - Not enough data entered. Minimum data entered is 5 digits. 2 for the macro number and 3 for the command name.
E2 - Invalid macro position. Number must be between 01..70
E3 - Macro overfull occurred. When this error is requested, the data you are appending onto a macro is more than the macro can hold. Try putting the next data in another macro and calling the second macro from the first.
E4 - Invalid Command name programmed in. Command names must be between 000..215
(System wide errors are listed in front of the manual)

Example 1:
I want to program macro 01 to speak a voice message
"Welcome to the Repeater, <Female Time>"

130 01 045 526 002 476 411 587 702 D or unkey

Response:
"Number <Macro> Programming <Command Name> With <Additional Data if any>"

131: Cancel all Responses Following This Command
132: Re-enables all Responses Following This Command

These commands cancel and re-enable all responses following these command execution. The user would put this in a macro when programming to keep the command responses that are spoken when a macro executes from being spoken and to re-enable voice responses after execution. For example, I need to turn outputs 4,5 on using Command 092. I also want to speak the response PL 100 hertz ON. If I executed this command from the macro without using Command 169 before Command 092 I would get the following response: "PL 100 Hertz ON" "4 ON, 5 ON". If I place command 131 between the Speak voice message and turn Output Line ON command my response would be "PL 100 Hertz ON" and nothing more. At the end of the macro you will need to execute Command 132 to re-enable the voice response.

Cancel responses following this command

<131>

Enable responses following this command

<132>

Parameters:
There are no parameters for this command

Error Codes:

(System wide errors are listed in front of the manual)

Example 1:
From the above mentioned example placed in macro 02

```
1) 127 02 D or unkey                                    ; Clears macro #02
2) 130 02 045 046 042 001 028 244 358 D or unkey        ; Programs the voice response
3) 130 02 131 D or unkey                                ; Cancels voice responses
4) 130 02 092 4 5 D or unkey                            ; Turn Outputs 4,5 ON
5) 130 02 132 D or unkey                                ; Re-enable voice responses
```

By executing macro 02, Command 142, outputs 4,5 are turned on and the response spoken is 'PL 100 Hertz On'

Response:
There are no responses for these commands

141..210: Execute Macro #01..#70

These commands execute macro positions 01..70. Programming of the macros is accomplished using Command 130.

Name	Number	Name	Number	Name	Number
Macro 01	141	Macro 25	165	Macro 49	189
Macro 02	142	Macro 26	166	Macro 50	190
Macro 03	143	Macro 27	167	Macro 51	191
Macro 04	144	Macro 28	168	Macro 52	192
Macro 05	145	Macro 29	169	Macro 53	193
Macro 06	146	Macro 30	170	Macro 54	194
Macro 07	147	Macro 31	171	Macro 55	195
Macro 08	148	Macro 32	172	Macro 56	196
Macro 09	149	Macro 33	173	Macro 57	197
Macro 10	150	Macro 34	174	Macro 58	198
Macro 11	151	Macro 35	175	Macro 59	199
Macro 12	152	Macro 36	176	Macro 60	200
Macro 13	153	Macro 37	177	Macro 61	201
Macro 14	154	Macro 38	178	Macro 62	202
Macro 15	155	Macro 39	179	Macro 63	203
Macro 16	156	Macro 40	180	Macro 64	204
Macro 17	157	Macro 41	181	Macro 65	205
Macro 18	158	Macro 42	182	Macro 66	206
Macro 19	159	Macro 43	183	Macro 67	207
Macro 20	160	Macro 44	184	Macro 68	208
Macro 21	161	Macro 45	185	Macro 69	209
Macro 22	162	Macro 46	186	Macro 70	210
Macro 23	163	Macro 47	187	.....	.....
Macro 24	164	Macro 48	188	.....	.....

Error Codes:
There are no errors for a macro execution
(System wide errors are listed in front of the manual)

Example 1:
I need to execute macro 01

141 D or unkey

Response:
The response depends on what commands are inside the macros

Chapter 16 Examples

Example 16-1: Need to Configure certain Links

This example the user needs to configure a link system normal that the users can call when turning the link system off, and a link system enabled for turning on the link system. These macros will contain several commands but can be called using only 1 command name. For this example we will use macro 01 for link on, and macro 02 for link off.

- Setting up the drop-out message

Dropout message for port 1 will be located in message slot 23. The message will speak 'Link Off' indicating the link system is currently off.

1) Program a message slot

- 049 23 1 354 292 D or unkey ; Program message slot 23 with Link Off

Where (049) is the message program utility, (23) is the message slot, (1) indicates voice message, (354 - Link) (292 - Off)

2) Tell the drop-out message 1, port 1 what event to call when enabled

- 064 013 1 023 1 D or unkey ; Set-up event slot 021

Where (064) is the event table program command, (013) is the drop-out event, (1) indicates a message fetched when the event is called, (023) is the message slot, (1) routes to port 1.

3) Disable the event until called by the link off command

- 065 013 0 D or unkey ; Disable the event

Where (065) is the event table control, (013) is the event being controlled, (0) disables the event being called.

- Setting up the link on macro

This macro is what the user calls when enabling the link system.

1) Clear current macro contents

- 127 01 D or unkey ; Deletes macro contents

2) Speak a response 'Link System On'

- 130 01 045 292 461 358 D or unkey ; Program the speaking command

Where (130) is the macro program command, (01) is the macro number, (045) is the command to be programmed into the macro, (292-Link), (461-System), (358-On) are the words associated with command 045.

3) Connect Port 1 to Port 2

- 130 01 000 1 2 D or unkey ; Program the connect command

Where (130) is the macro program command, (01) is the macro number, (000) is the command to be programmed into the macro, (1 2) connects port 1 to port 2.

5) Disable drop-out message 1, port 1

- 130 01 065 013 0 D or unkey ; Program the event control command

Where (130) is the macro program command, (01) is the macro number, (065) is the command to be programmed into the macro, (013) is port 1's drop-out message 1, (0) disables the event

- Setting up the link off macro

This macro is what the user calls when disabling the link system.

1) Clear current macro contents

- 127 02 D or unkey ; Deletes macro contents

2) Speak a response 'Link System Off'

- 130 02 045 292 461 354 D or unkey ; Program the speaking command

Where (130) is the macro program command, (02) is the macro number, (045) is the command to be programmed into the macro, (292-Link), (461-System), (354-Off) are the words associated with command 045.

3) Disconnect Port 1 from Port 2

- 130 02 002 1 2 D or unkey ; Program the disconnect command

Where (130) is the macro program command, (02) is the macro number, (002) is the command to be programmed into the macro, (1 2) disconnects port 1 from port 2.

4) Enable drop-out message 1, port 1

- 130 02 065 013 1 D or unkey ; Program the event control command

Where (130) is the macro program command, (02) is the macro number, (065) is the command to be programmed into the macro, (013) is port 1's drop-out message 1, (1) enables the event

Chapter 15: Serial Commands

211: Serial Upload Data File

This command uploads a serial data file that was generated by the RLC-1 controller. This file will only upload V2.XX software blocks. Do not edit the upload file.

<211>

Execution Source:
This command can only be executed from the RS-232 port

Parameters:
There are no parameters for this command

Notes:

- Once you enter command 211, the controller will prompt you to begin the upload. All functions on the controller will cease to operate except the serial system. Data files have been successfully uploaded at 9600 baud without errors. Once the upload is complete the controller will prompt you with a checksum match message. if the checksums do not match try a slower baud rate, or change your ASCII upload requirements character pacing timing. This may slow the upload but it will guarantee a successful transfer.

Error Codes:

(System wide errors are listed in front of the manual)

Example 1:
I need to re-upload my hex file after I re-initialized the controller

211 <Enter>

Response:
There is no response for this command

212: Serial Download Data File

This command downloads the controllers memory contents from the controller to your computer. Before executing this command set-up your computer for ASCII download. Once the computers file has been opened, execute Command 212. When the download has stopped and given you a file checksum, you can close the file.

<212>

Parameters:
There are no parameters for this command

Defaults:
There are no defaults for this command

Error Codes:
(System wide errors are listed in front of the manual)

Example 1:
I have completely set-up my controller. Now I need to save the contents on my computer incase of any problems.

212 <Enter>

Response:
Serial download data on your screen

213: Serial Command Name List

This command lists all the controllers command names including execution sources, DTMF and serial locking.

<213>

Parameters:
There are no parameters for this command

Defaults:
There are no defaults for this command

Error Codes:

(System wide errors are listed in front of the manual)

Example 1:
I need a list of all the controllers command names.

213 D or unkey

Response:
Serial command name lists

214: Change the Serial Baud Rate or Send Serial Data

This command changes the serial baud rate for the RS-232 port if only 1 digit is entered. If 3 or more digits are entered the controller will convert those digits into serial data and send them.

<214> *x y or xxx*

Parameters:

X is the serial baud rate

Baud Number	Baud Rate		Baud Number	Baud Rate
0	38,400		5	1,200
1	19,200		6	600
2	9,600		7	300
3	4,800		8	150
4	2,400		9	110

Y is the echo control

Where 1 - disables serial output

0 - enables serial output

or...

XXX is a number from 000..255 which is the ASCII data send (See Appendix

Defaults:

Baud rate defaults to 9600

Error Codes:

E1 - Invalid baud rate

E2 - Invalid Serial character. Number must be between 000..255

(System wide errors are listed in front of the manual)

Example 1:

I need to change my baud rate from 9600 to 2400 baud and enable serial output

214 4 0 D or unkey

Response:

"Computer Programming Rate Is <X>"

There is no voice response when sending ASCII data

Chapter 15 Examples

Example 15-1: Setting up the Serial Port

I need to set-up the serial port to 2400 baud before I do a serial download.

1) Command 214 is provided to change the serial baud rate. Locate 2400 baud in the below table and enter the reference number into Command 214.

Baud Number	Baud Rate		Baud Number	Baud Rate
0	38,400		5	1,200
1	19,200		6	600
2	9,600		7	300
3	4,800		8	150
4	2,400		9	110

2) Enter '2' into Command 214

214 4 0<Enter> ; Sets the baud rate to 2400 N-8-1 and enables serial output

Example 15-2: I want to download the RAM into a file

This example will take you through a session of downloading the controllers RAM content into a file on your computer. This file is a backup of your systems settings. If the controller is ever re-initialized with version 2.XX software the user can then upload the file and maintain the previous settings before the initialization occurred.

1) Once you have set-up the computers baud rate to what the controller defaults to you can execute the download commands. If you have set the controller up correctly you should get the DTMF> prompt when you hit the <ENTER> key. If you do not get this verify your serial ports set-up.

2) Set-up your computers terminal software to ASCII download. Your computer will ask for a file name to save the file once received. Enter a name that is easy to remember.

3) Once you have entered a name and the computer is waiting to receive the file type the digits 212. This will execute Command 212. Once you have entered the command the controller will begin to send 'Garbage' looking data. This will continue for several seconds. At the end of the file download the controller will give prompt you to close your download file. Typical programs use the 'Escape' digit to close the file once the download is complete. The file length is typically 16,072 bytes long. If your file is much bigger or smaller beware of possible download problems.

4) To upload a file from the computers disk you will need to set-up your controller for ASCII file upload using Command 211. Once you execute Command 211 the controller will stop working until either a reset is received or the file upload session is complete. The steps in uploading a file:

- Execute Command 211
  The controller will prompt you to begin your upload or hit {} to terminate the upload process.
- Upload the controllers file from your computers disk drive
- Once the upload is complete the controller will state the calculated check-sum and the files expected checksum. If the checksums match the data that you uploaded to the controller matched what the controller downloaded. If the checksums do not match the file you uploaded has problems.
- Failed checksums will leave the controller in an unknown state. Try re-uploading the file at a slower baud rate.

Chapter 16: Misc. Commands

116: Select a Tone Volume Control Level

This command allows the user to program the level of the generated tones. The default level of all tone systems on the RLC-1 is set to 0dB. You can adjust the level of each tone system , from 0dB to -19dB. Each tone system can control 2 tones, generated simultaneously. This allows tru 2-tone, sine-wave generated tones from the RLC-1.

<116> s xx yy

Parameters:

S is the tone source (See table below)

Offset	Tone Source
0	CW Tones
1	Paging Tones
2	Port 1 Courtesy Beeps
3	Port 2 Courtesy Beeps
4	DTMF Cover Tone
5	DTMF Re-Generate
6	Pre-Access Tone
7	Custom Generated Tone (See Command 042)
8	Pre-Set Gererated Tone (See Command 042)

XX is the tone level attenuation assigned to Tone 1. This number ranges from 00..19
YY is the tone level attenuation assigned to Tone 2. This number ranges from 00..19

Error Codes:

E1 - Invalid Source Number. Number must be between 0..8
E2 - Invalid Tone table. Number must be between 00..19
(System wide errors are listed in front of the manual)

Example 1:
I want my courtesy beep on Port 1 to be -3dB down from the 2-tone Paging system. The 2-tone paging system is set at 0dB.

116 2 03 03 D or unkey

Where 03 sets Tone 1 level to -3dB and 03 sets Tone 2 level to -3dB.

Example 2:
I need set the DTMF cover tone to be -3dB lower than my courtesy beeps tone level. Above I set my courtesy beep level on Port 1 to -3dB.

116 4 06 06 D or unkey

Example 3:
I need to set the DTMF regeneration to have a -2dB twist between the 2 tones used in the DTMF regeneration system.

116 5 00 02 D or unkey

The following examples show how easy the software variable tone levels are to adjust.

Response:
"Number" <Tone Source> "TN 0 Level Is" <Level 1> "TN 1 Level Is" <Level 2>

Defaults:
All tone tables are set to 0dB attenuation

117: Recall the Tone Level Settings

This command allows the user to recall the settings of the system tone levels. The levels were set in Command 116.

<117> s

Parameters:

S is the tone source (See table below)

Offset	Tone Source
0	CW Tones
1	Paging Tones
2	Port 1 Courtesy Beeps
3	Port 2 Courtesy Beeps
4	DTMF Cover Tone
5	DTMF Re-Generate
6	Pre-Access Tone
7	Custom Generated Tone (See Command 042)
8	Pre-Set Gererated Tone (See Command 042)

Defaults:

All tone tables default to 0dB attenuation

Error Codes:

E1 - Invalid Source Number. Number must be between 0..8
E2 - Invalid Tone table. Number must be between 00..19
(System wide errors are listed in front of the manual)

Response:

"Number" <Tone Source> "TN 0 Level Is" <Level 1> "TN 1 Level Is" <Level 2>

215: Remotely Reset the Controller

This command remotely resets the RLC-1 controller. This will not change any of the system variables, only provide a reset function.

<215>

Parameters:
There are no parameters for this command

Defaults:
There are no defaults for this command

Error Codes:
(System wide errors are listed in front of the manual)

Example 1:
I need to reset my controller to clear a condition

215 D or unkey

Response:
"Controller Ready"

Chapter 17: Appendix and Board Modules

Appendix A: ASCII Data Table

This chart may be helpful when programming serial messages with Command 244. Not all of the codes are included because not all of them are universally used and some don't print well.

032	073 I	114 r	156 £	197 3	238 ϵ
033 !	074 J	115 s	157 ¥	198 G	239 ∩
034 "	075 K	116 t	158 ₧	199 K	240 ≡
035 #	076 L	117 u	159 *f*	200 9	241 ±
036 $	077 M	118 v	160 á	201 6	242 ≥
037 %	078 N	119 w	161 í	202 =	243 ≤
038 &	079 O	120 x	162 ó	203 ;	244 ⌠
039 '	080 P	121 y	163 ú	204 :	245 ⌡
040 (	081 Q	122 z	164 ñ	205 4	246 ÷
041)	082 R	123 {	165 Ñ	206 >	247 ≈
042 *	083 S	124 |	166 ª	207 N	248 °
043 +	084 T	125 }	167 º	208 J	249 ∙
044 ,	085 U	126 ~	168 ¿	209 L	250 ·
045 -	086 V	128 Ç	169 ⌐	210 H	251 √
046 .	087 W	129 ü	170 ¬	211 F	252 **6**
047 /	088 X	130 é	171 ½	212 B	253 ²
048 0	089 Y	131 â	172 ¼	213 ?	254 **#**
049 1	090 Z	132 ä	173 ¡	214 C	255
050 2	091 [	133 à	174 «	215 O	
051 3	092 \	134 å	175 »	216 P	
052 4	093]	135 ç	176 !	217 -	
053 5	094 ^	136 ê	177 "	218 +	
054 6	095 _	137 ë	178 #	219 $	
055 7	096 `	138 è	179 *	220 (	
056 8	097 a	139 ï	180 1	221 %	
057 9	098 b	140 î	181 I	222 '	
058 :	099 c	141 ì	182 M	223 &	
059 ;	100 d	142 Ä	183 D	224 α	
060 <	101 e	143 Å	184 @	225 ß	
061 =	102 f	144 É	185 <	226 Γ	
062 >	103 g	145 æ	186 5	227 π	
063 ?	104 h	146 Æ	187 7	228 Σ	
064 @	105 i	147 ô	188 8	229 σ	
065 A	106 j	148 ö	189 E	230 µ	
066 B	107 k	149 ò	190 A	231 τ	
067 C	108 l	150 û	191 ,	232 Φ	
068 D	109 m	151 ù	192 .	233 Θ	
069 E	110 n	152 ÿ	193 2	234 Ω	
070 F	111 o	153 Ö	194 0	235 δ	
071 G	112 p	154 Ü	195 /	236 ∞	
072 H	113 q	155 ¢	196)	237 ϕ	

Appendix B: Voice Word Look-up Table

Custom word requests can be given to Link Communications for $50.00 per word. The words will be added to the general word directory when purchased. Contact Link Communications Inc. for more information. (-F) Indicates The Female Voice

Romeo's Words

000 ZERO
001 ONE
002 TWO
003 THREE
004 FOUR
005 FIVE
006 SIX
007 SEVEN
008 EIGHT
009 NINE
010 TEN
011 ELEVEN
012 TWELVE
013 THIRTEEN
014 FOURTEEN
015 FIFTEEN
016 SIXTEEN
017 SEVENTEEN
018 EIGHTEEN
019 NINETEEN
020 TWENTY
021 THIRTY
022 FORTY
023 FIFTY
024 SIXTY
025 SEVENTY
026 EIGHTY
027 NINETY
028 HUNDRED
029 THOUSAND
030 MILLION
031 A
032 B
033 C
034 D
035 E
036 F
037 G
038 H
039 I
040 J
041 K
042 L
043 M
044 N
045 O
046 P
047 Q
048 R
049 S
050 T
051 U
052 V
053 W
054 X
055 Y
056 Z
057 ABORT
058 ABOUT
059 ABOVE
060 ACKNOWLEDGE
061 ACTION
062 ADJUST
063 ADVANCED
064 ADVISE
065 AERIAL
066 AFFIRMATIVE
067 AIR
068 AIRPORT
069 AKRON
070 ALERT
071 ALL
072 ALOFT
073 ALPHA
074 ALTERNATE
075 ALTITUDE
076 AMATEUR
077 AMPS
078 AND
079 ANSWER
080 APPROACH
081 APRIL
082 AREA
083 ARRIVAL
084 AS
085 ASSOCIATION
086 AT
087 AUGUST
088 AUTO
089 AUTOMATIC
090 AUTOPILOT
091 AUXILIARY
092 AVON
093 AVON MOUNTAIN
094 A.M.
095 BAND
096 BANK
097 BASE
098 BATTERY
099 BELOW
100 BETWEEN
101 BLOWING
102 BLUE KNOB
103 BOARD
104 BOOST
105 BOZO
106 BRAKE
107 BRAVO
108 BREAK
109 BROKEN
110 BUSY
111 BUTTON
112 BY
113 CABIN
114 CALIBRATE

115 CALL
116 CALLING
117 CALM
118 CANCEL
119 CAUTION
120 CEILING
121 CELSIUS
122 CENTER
123 CHANGE
124 CHARLIE
125 CHECK
126 CIRCUIT
127 CLEAR
128 CLIMB
129 CLOCK
130 CLOSED
131 CLUB
132 CODE
133 COLUMBUS
134 COME
135 COMPLETE
136 COMPUTER
137 CONDITION
138
CONGRATULATIONS
139 CONNECT
140 CONNECTICUT
141 CONTACT
142 CONTROL
143 CONVERGING
144 COSHOCTON
145 COUNT
146 COURSE
147 CRANE
148 CROSSWIND
149 CURRENT
150 CUYAHOGA FALLS
151 CYCLE
152 DALLAS
153 DANGER
154 DATE
155 DAY
156 DAYS
157 DAYTON
158 DECEMBER
159 DECREASE
160 DECREASING
161 DEGREES
162 DELTA
163 DEPARTURE
164 DEVICE
165 DIAL
166 DINNER
167 DIRECTION
168 DISPLAY
169 DIVIDED
170 DOOR
171 DOWN
172 DOWNWIND
173 DRIVE
174 DRIZZLE
175 DUST
176 EAST
177 ECHO
178 ELECTRICIAN
179 ELEVATION
180 EMERGENCY
181 ENGINE
182 ENTER
183 EQUAL
184 EQUALS
185 ERROR
186 ESTIMATED
187 EVACUATE
188 EVACUATION
189 EXIT
190 EXPECT
191 FAIL
192 FAILURE
193 FARAD
194 FARENHEIT
195 FARMINGTON
196 FAST
197 FEBRUARY
198 FEET
199 FILED
200 FINAL
201 FINDLAY
202 FIRE
203 FIRST
204 FLAPS
205 FLIGHT
206 FLOW
207 FOG
208 FOR
209 FOURTH
210 FOXTROT
211 FREEDOM
212 FREEZING
213 FREQUENCY
214 FRIDAY
215 FROM
216 FRONT
217 FULL
218 GALLONS
219 GATE
220 GAUGE
221 GEAR
222 GET
223 GLIDE
224 GO
225 GOLF
226 GOODBYE
227 GREEN
228 GREENWICH
229 GROUND
230 GURNEE
231 GUSTINGTO
232 HAIL
233 HALF
234 HAM
235 HAMFEST
236 HAMVENTION
237 HAVE
238 HAZARDOUS
239 HAZE
240 HEAVY
241 HELLO
242 HELP
243 HENRY
244 HERTZ
245 HIGH
246 HOLD
247 HOME
248 HOTEL
249 HOUR
250 HOURS
251 ICE
252 ICING
253 IDENTIFY
254 IGNITE

255 IGNITION
256 IMMEDIATELY
257 IN
258 INBOUND
259 INCH
260 INCREASE
261 INCREASING
262 INCREASINGTO
263 INDIA
264 INDICATED
265 INFLIGHT
266 INFORMATION
267 INNER
268 INSPECTOR
269 INTRUDER
270 IS
271 IT
272 JANUARY
273 JULIET
274 JULY
275 JUNE
276 KENTUCKY
277 KEY
278 KILO
279 KNOTS
280 LAND
281 LANDING
282 LATE
283 LAUNCH
284 LEAN
285 LEFT
286 LEG
287 LESS THAN
288 LEVEL
289 LIGHT
290 LIMA
291 LINE
292 LINK
293 LIST
294 LITTON
295 LOCK
296 LONG
297 LOOK
298 LOW
299 LOWER
300 LUNCH
301 MACHINE
302 MAINTAIN
303 MANUAL
304 MARCH
305 MARKER
306 MAY
307 MAYDAY
308 ME
309 MEAN
310 MEASURE
311 MEETING
312 MEGA
313 MESSAGES
314 METER
315 MICRO
316 MIKE
317 MILES
318 MILL
319 MILLI
320 MINUS
321 MINUTES
322 MIST
323 MOBILE
324 MODERATE
325 MONDAY
326 MONTH
327 MORETHAN
328 MOTOR
329 MOUNT HAMILTON
330 MOUNT TAMALPAIS
331 MOVE
332 MOVING
333 MUCH
334 NEAR
335 NEGATIVE
336 NET
337 NEW
338 NEWINGTON
339 NEW HAVEN
340 NEXT
341 NIGHT
342 NO
343 NORTH
344 NORTHEAST
345 NORTHWEST
346 NOT
347 NOVEMBER
348 NUMBER
349 OAKS
350 OBSCURED
351 O'CLOCK
352 OCTOBER
353 OF
354 OFF
355 OHIO
356 OHMS
357 OIL
358 ON
359 OPEN
360 OPERATION
361 OPERATOR
362 OSCAR
363 OTHER
364 OUT
365 OUTER
366 OVER
367 OVERCAST
368 PAPA
369 PARTIALLY
370 PASS
371 PASSED
372 PATCH
373 PATH
374 PELLETS
375 PER
376 PERCENT
377 PHONE
378 PICO
379 PLEASE
380 PLUS
381 POINT
382 POLICE
383 POSITION
384 POWER
385 PRACTICE
386 PRESS
387 PRESSURE
388 PRIVATE
389 PROBE
390 PROGRAMMING
391 PULL
392 PUSH
393 P.M.
394 QUEBEC
395 RADAR

396 RADIO
397 RAIN
398 RAISE
399 RANGE
400 RATE
401 RATTLESNAKE MOUNTAIN
402 READY
403 REAR
404 RECEIVE
405 RED
406 RELEASE
407 REMARK
408 REMOTE
409 REPAIR
410 REPEAT
411 REPEATER
412 RICH
413 RICHMOND
414 RIG
415 RIGHT
416 ROAD
417 ROGER
418 ROMEO
419 ROUTE
420 RUNWAY
421 SAFE
422 SAINT PETERSBURG
423 SAND
424 SANTA CLARA
425 SAN LEANDRO
426 SATURDAY
427 SCATTERED
428 SECOND
429 SECONDS
430 SECURITY
431 SELECT
432 SEPTEMBER
433 SEQUENCE
434 SERVICE
435 SET
436 SEVERE
437 SEXY
438 SHORT
439 SHOWERS
440 SHUT
441 SIDE
442 SIERRA
443 SIGHT
444 SLEET
445 SLOPE
446 SLOW
447 SMOKE
448 SNOW
449 SOUTH
450 SOUTHEAST
451 SOUTHWEST
452 SPEED
453 SPRAY
454 SQUAWK
455 STALL
456 START
457 STOP
458 STORM
459 SUNDAY
460 SWITCH
461 SYSTEM
462 TANGO
463 TANK
464 TARGET
465 TARPON SPRINGS
466 TAXI
467 TEEN
468 TELEPHONE
469 TEMPERATURE
470 TERMINAL
471 TEST
472 THANK YOU
473 THAT
474 THE (LONG E)
475 THE (SHORT E)
476 THE
477 THIN
478 THINLY
479 THIRD
480 THIS IS
481 THIS
482 THUNDERSTORMS
483 THURSDAY
484 TIME
485 TIMER
486 TIMES
487 TO
488 TODAY
489 TOMORROW
490 TONIGHT
491 TOOL
492 TORNADO
493 TORONTO
494 TOUCHDOWN
495 TOWER
496 TRAFFIC
497 TRANSMIT
498 TRIM
499 TUESDAY
500 TURBULANCE
501 TURN
502 UNDER
503 UNIFORM
504 UNIT
505 UNLIMITED
506 UNTIL
507 UP
508 USE (NOUN)
509 USE (VERB)
510 VALLEY
511 VALVE
512 VARIABLE
513 VERIFY
514 VICTOR
515 VISIBILITY
516 VOLTS
517 WAIT
518 WAKE
519 WAKEUP
520 WARNING
521 WATCH
522 WATTS
523 WAY
524 WEATHER
525 WEDNESDAY
526 WELCOME
527 WEST
528 WEST HARTFORD
529 WHISKEY
530 WILL
531 WIND
532 WISKEY
533 WITH
534 WRONG
535 X-RAY

536 YANKEE
537 YELLOW
538 YESTERDAY
539 YOU
540 YOUR
541 ZED
542 ZONE
543 ZULU

Prefixes and Suffixes

544 FIF-
545 THIR-
546 -ED
547 -ER
548 -ING
549 -S
550 -TEEN
551 -TH
552 -TY

Juliet's Words

553 OH
554 ONE
555 TWO
556 THREE
557 FOUR
558 FIVE
559 SIX
560 SEVEN
561 EIGHT
562 NINE
563 TEN
564 ELEVEN
565 TWELVE
566 THIRTEEN
567 FOURTEEN
568 FIFTEEN
569 SIXTEEN
570 SEVENTEEN
571 EIGHTEEN
572 NINETEEN
573 TWENTY
574 THIRTY
575 FORTY
576 FIFTY
577 GOOD
578 MORNING
579 AFTERNOON
580 EVENING
581 THE
582 TIME
583 IS
584 A.M.
585 P.M.
586 O'CLOCK

Pause

587 PAUSE

Sound Effects

588 LASER
589 WHISTLE
590 PHASER
591 TRAIN
592 EXP
593 CROWD
594 TIC
595 TOC
596 HIGH-LOW TONE
597 LOW-HIGH TONE
598 HIGH TONE

Junior's Words

599 ALARM
600 AMATEUR
601 ANALOG
602 ARIZONA
603 AUTOPATCH
604 BACHELOR
605 BAD
606 BASE
607 BATTERY
608 BAY
609 BILLINGS
610 BOZEMAN
611 CANOE
612 CAPROCK
613 CENTRAL
614 CHARGING
615 CLOUDS
616 CLUB
617 COMMUNICATIONS
618 CONTROLLER
619 DIGITAL
620 EMPIRE
621 EVENT
622 FIELD
623 FLASH
624 FLOOD
625 FRIENDLY
626 GOLDEN
627 GREYCLIFF
628 HAM
629 HAMFEST
630 HARRISON
631 HOLLEY
632 HOME
633 INFORMATION
634 INLAND
635 INPUT
636 INSIDE
637 KOOTENAI
638 LINK
639 LITTLEROCK
640 MEDIUM
641 MEETING
642 MICA
643 MONITOR
644 MOUNTAIN
645 NET
646 OBED
647 OREGON
648 OUTSIDE
649 PEAK
650 POUND
651 PUMP
652 PYRAMID
653 RACES
654 RADIO
655 RATTLESNAKE
656 REMOTE
657 REPEATER
658 RIDGE
659 SANDRA
660 SCAN
661 SIDNEY

662 SKYWARN
663 SOCIETY
664 SPOKANE
665 STAR
666 STATE
667 SUNDANCE
668 SYSTEM
669 TACOMA
670 THIS
671 TIGER
672 TODAY
673 TOMORROW
674 TONIGHT
675 VALUE
676 VOLTAGE
677 WASHINGTON
678 WATCH
679 WATER
680 WELCOME
681 WITH
682 YAKIMA
683 YELLOWHEAD
684 YELLOWKNIFE
685 ZED

ANG 2 HIGH TIME 718
ANG 3 HIGH TIME 719
ANG 4 HIGH TIME 720
ANG 1 LOW TIME 721
ANG 2 LOW TIME 722
ANG 3 LOW TIME 723
ANG 4 LOW TIME 724
ANG 1 HIGH DATE 725
ANG 2 HIGH DATE 726
ANG 3 HIGH DATE 727
ANG 4 HIGH DATE 728
ANG 1 LOW DATE 729
ANG 2 LOW DATE 730
ANG 3 LOW DATE 731
ANG 4 LOW DATE 732
VOICE POLITE 733
(Cancels the Voice Message)
VOICE POLITE 1 734
(Same as #733 but calls a event)
(Event 075 - Port 1 Voice Interrupted)
(Event 076 - Port 2 Voice Interrupted)

Execute a Command 686
Wait for receiver 687

Special Words:
GOOD M/A/E 700
MALE TIME 701
FEMALE TIME 702
MALE DATE 703
MALE DAY 704
ANALOG 1 705
ANALOG 2 706
ANALOG 3 707
ANALOG 4 708
ANALOG 1 HIGH 709
ANALOG 2 HIGH 710
ANALOG 3 HIGH 711
ANALOG 4 HIGH 712
ANALOG 1 LOW 713
ANALOG 2 LOW 714
ANALOG 3 LOW 715
ANALOG 4 LOW 716
ANG 1 HIGH TIME 717

Special Voice Words

Special voice words begin at 700. These words do special functions like read the time, day, date, analog channels with high/lows.

Special words 733 and 734 control how a **Voice** message is handled. When the voice encounters either of these 2 words it will watch the calling channel and quit speaking if interrupted. When interrupted the voice will either quit speaking, or it will quit speaking and fetch an event (See command 063,064,065). This fetched event can contain a special CW message for ID's, voice interruption messages, and alike. This word can be located anywhere in the voice message.

Special word 686 allows execution of a command with a voice message. This is useful in synchronization of commands with words. Applications of this special word include link on\off messages, starting an external cart machine, toggling output lines on\off with the voice synthesizer and the list goes on... The format for this command is as follows: Word 602 must be followed by a 3 digit command number ranging between 000 and 245. This command number will be executed when the voice synthesizer reaches it.

Special word 687 forces the voice synthesizer to wait until all the receivers, on the ports the voice message is being routed to, go inactive before the message begins. This word should be the first word in the voice message if you want a polite response. Applications for this word are routing messages out half-duplex radio ports and having a truly polite voice message on a repeater port. In any application using this word it is important to remember that the voice synthesizer will not speak, at all, while the receivers of the connected ports are active. CW character 42 has the same affect on the CW messages.

Appendix C: Hardware

Board Layout

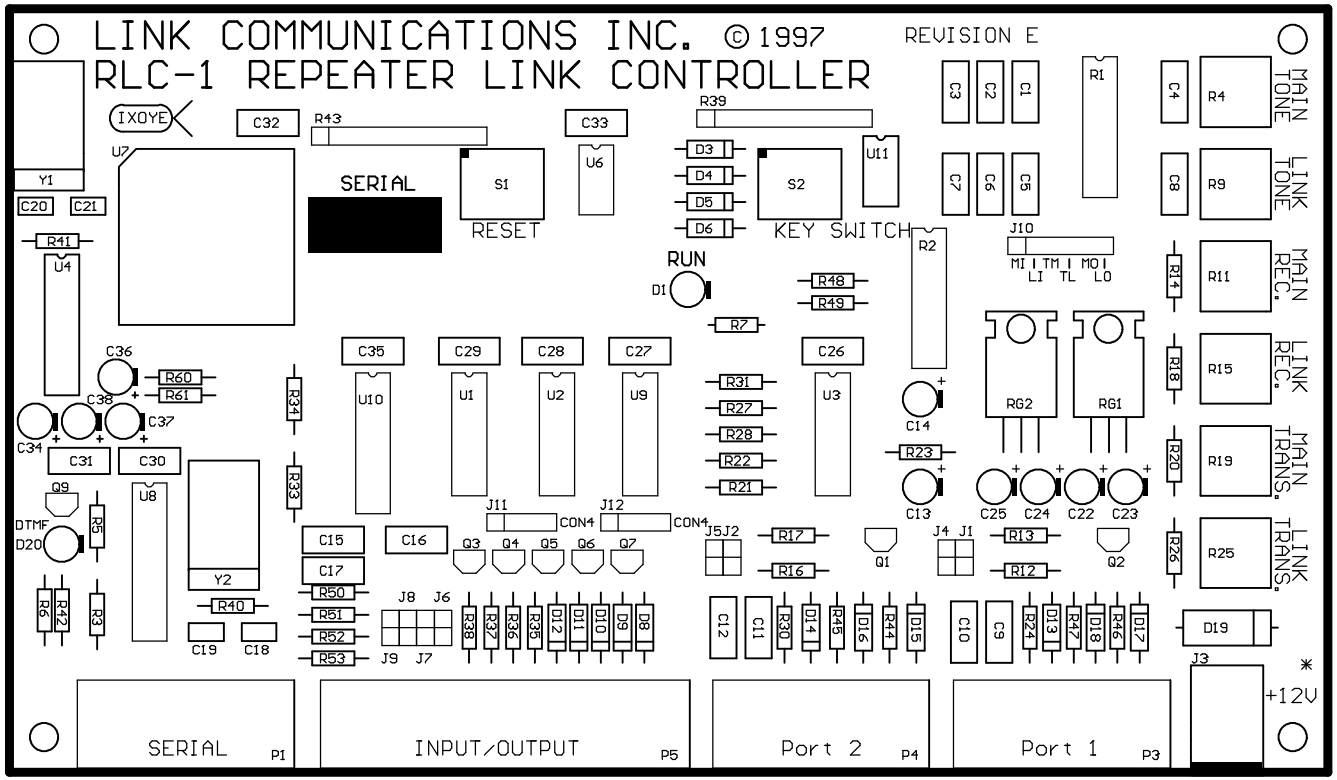

LAYERS: 2
PC: 0.062
TIN\LEAD W/ 1OZ COPPER
SIZE: 7.575 x 4.400
SR1000 DULL GREEN SOLDER MASK
WHITE LEGEND
862 HOLES

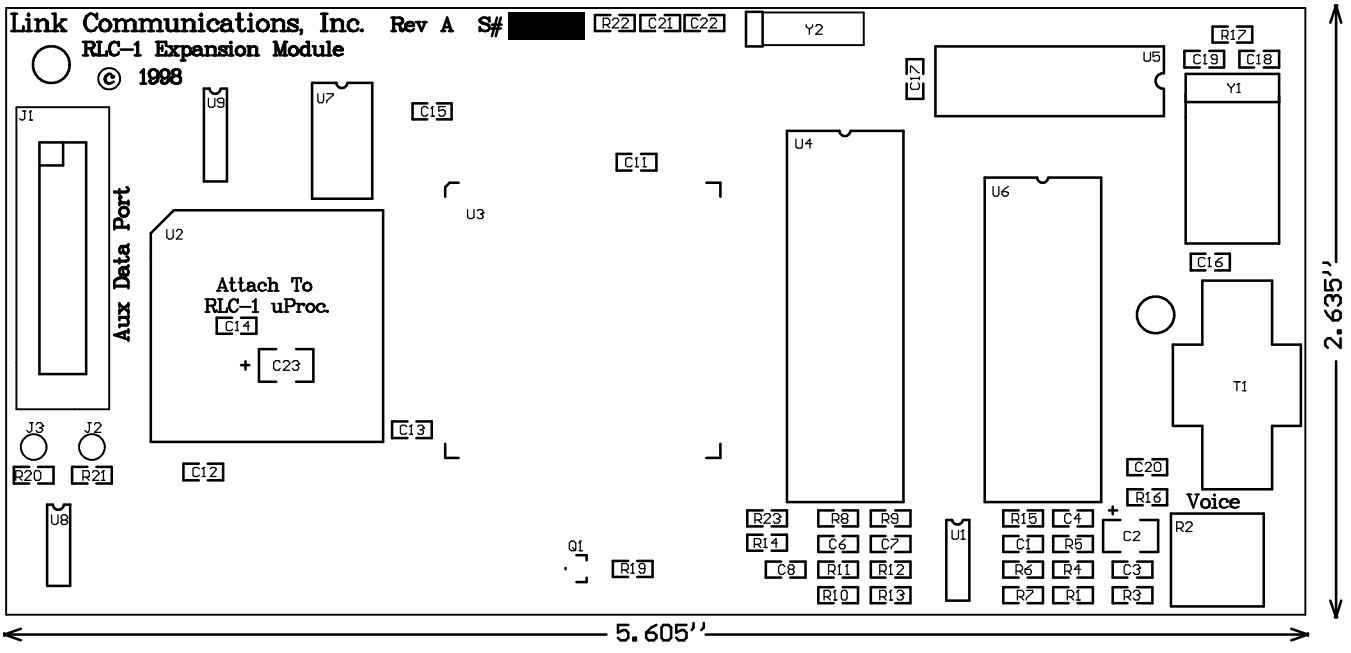
Link Communications, Inc.
Rev A
S# [redacted]
RLC-1 Expansion Module
© 1998
Aux Data Port
Attach To
RLC-1 uProc.
Voice
2.635''
5.605''

Schematic Diagrams

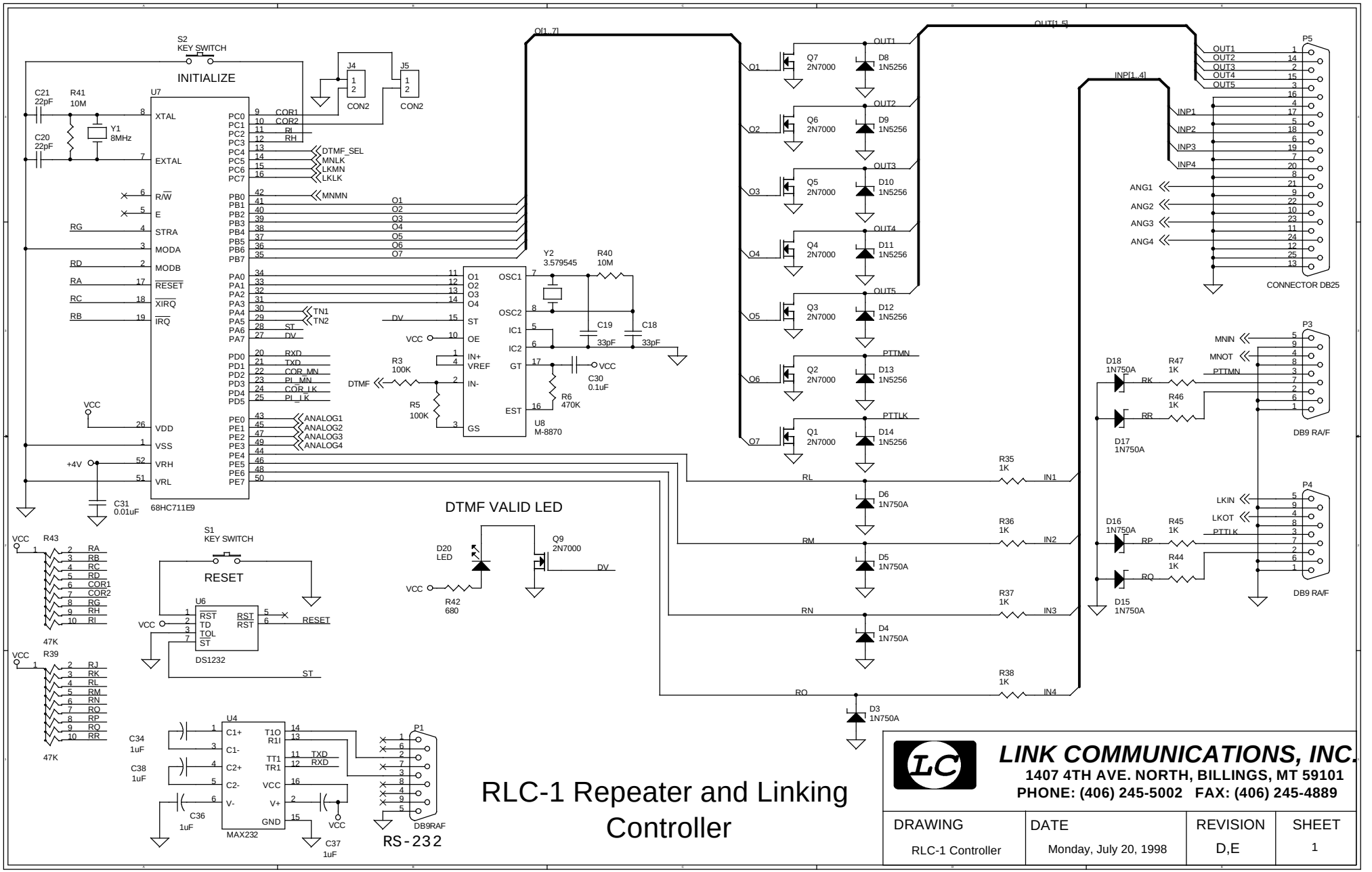
S2
KEY SWITCH
INITIALIZE
J4
J5
CON2
CON2
C21
22pF
R41
10M
C20
22pF
Y1
8MHz
U7
XTAL
EXTAL
R/W
E
STRA
MODA
MODB
RESET
XIRQ
IRQ
VDD
VSS
VRH
VRL
68HC711E9
PC0 COR1
PC1 COR2
PC2 RI
PC3 RH
PC4 DTMF_SEL
PC5 MNLK
PC6 LKMN
PC7 LKLK
PB0 MNMN
PB1 O1
PB2 O2
PB3 O3
PB4 O4
PB5 O5
PB6 O6
PB7 O7
PA0
PA1
PA2
PA3
PA4 TN1
PA5 TN2
PA6 ST
PA7 DV
PD0 RXD
PD1 TXD
PD2 COR_MN
PD3 PI_MN
PD4 COR_LK
PD5 PI_LK
PE0 ANALOG1
PE1 ANALOG2
PE2 ANALOG3
PE3 ANALOG4
PE4
PE5
PE6
PE7
RG
RD
RA
RC
RB
VCC
+4V
C31
0.01uF
O[1..7]
Y2
3.579545
R40
10M
C19
33pF
C18
33pF
C30
0.1uF
R6
470K
R3
100K
R5
100K
DTMF
DV
U8
M-8870
OSC1
OSC2
IC1
IC2
GT
EST
IN+
VREF
IN-
GS
O1
O2
O3
O4
ST
OE
Q7 2N7000
Q6 2N7000
Q5 2N7000
Q4 2N7000
Q3 2N7000
Q2 2N7000
Q1 2N7000
D8 1N5256
D9 1N5256
D10 1N5256
D11 1N5256
D12 1N5256
D13 1N5256
D14 1N5256
OUT1
OUT2
OUT3
OUT4
OUT5
PTTMN
PTTLK
OUT[1..5]
INP[1..4]
P5
CONNECTOR DB25
ANG1
ANG2
ANG3
ANG4
INP1
INP2
INP3
INP4
P3
DB9 RA/F
MNIN
MNOT
PTTMN
D18 1N750A
D17 1N750A
R47 1K
R46 1K
RK
RR
P4
DB9 RA/F
LKIN
LKOT
PTTLK
D16 1N750A
D15 1N750A
R45 1K
R44 1K
RP
RQ
RL
RM
RN
RO
R35 1K
R36 1K
R37 1K
R38 1K
IN1
IN2
IN3
IN4
D6 1N750A
D5 1N750A
D4 1N750A
D3 1N750A
DTMF VALID LED
D20
LED
R42
680
Q9
2N7000
DV
R43
47K
R39
47K
RA
RB
RC
RD
COR1
COR2
RG
RH
RI
RJ
RK
RL
RM
RN
RO
RP
RQ
RR
S1
KEY SWITCH
RESET
U6
DS1232
RST
TD
TOL
ST
U4
MAX232
C1+
C1-
C2+
C2-
V-
V+
T1O
R1I
TT1
TR1
GND
C34
1uF
C38
1uF
C36
1uF
C37
1uF
P1
DB9RAF
RS-232
TXD
RXD
RLC-1 Repeater and Linking Controller
LINK COMMUNICATIONS, INC.
1407 4TH AVE. NORTH, BILLINGS, MT 59101
PHONE: (406) 245-5002 FAX: (406) 245-4889
DRAWING
RLC-1 Controller
DATE
Monday, July 20, 1998
REVISION
D,E
SHEET
1

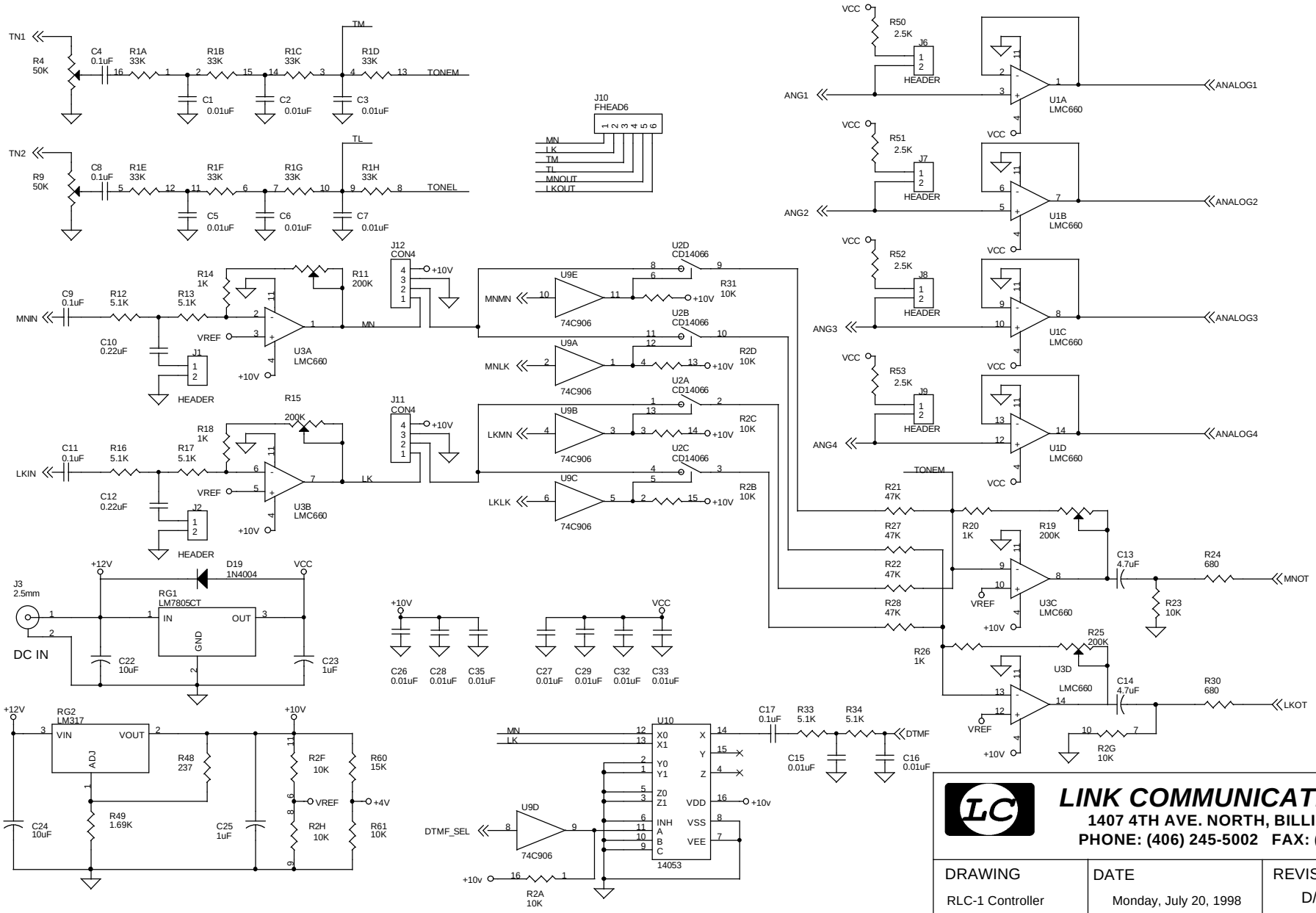

LINK COMMUNICATIONS, INC.
1407 4TH AVE. NORTH, BILLINGS, MT 59101
PHONE: (406) 245-5002 FAX: (406) 245-4889

DRAWING	DATE	REVISION	SHEET
RLC-1 Controller	Monday, July 20, 1998	D/E	2

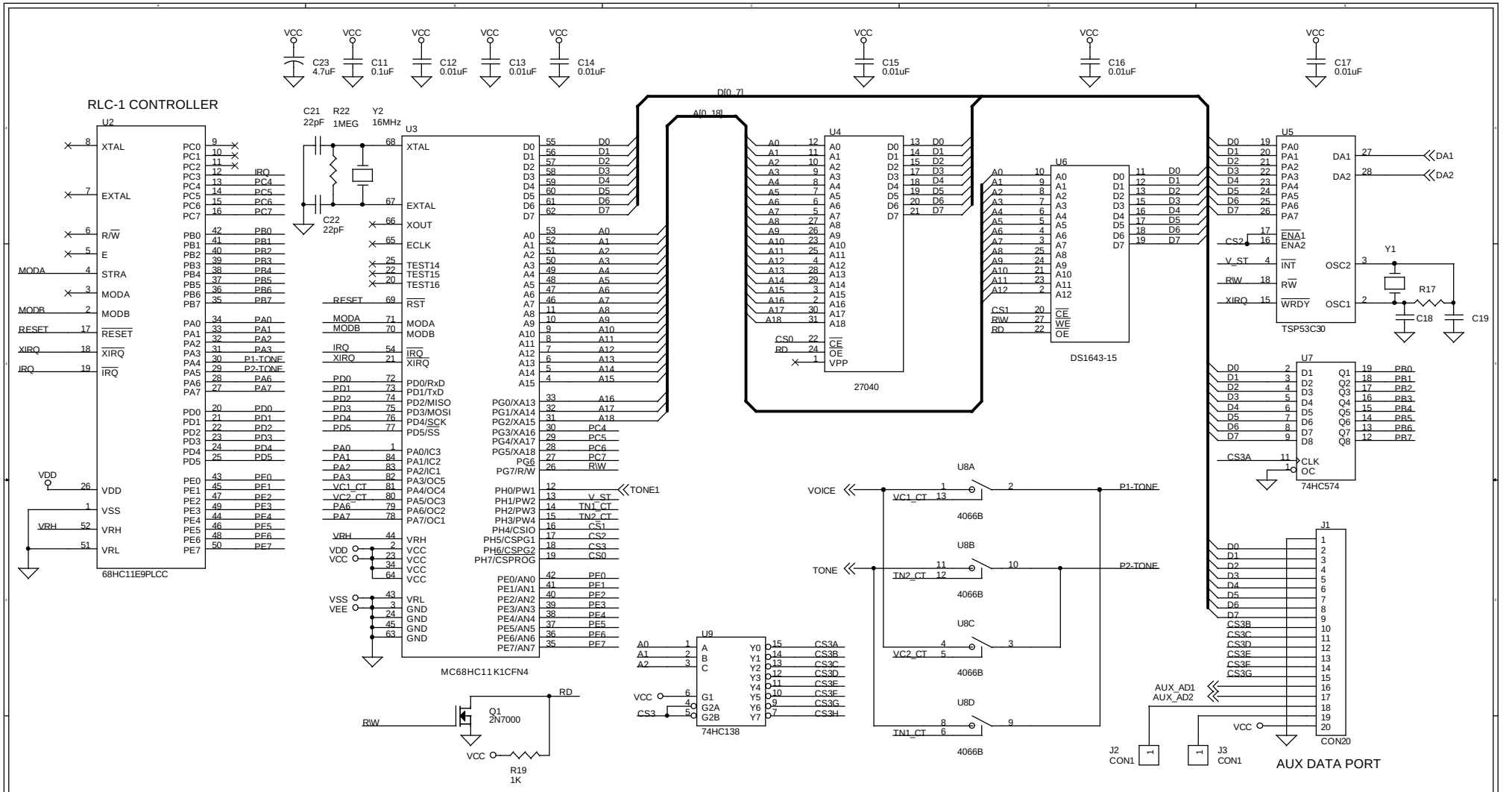

RLC-1 EXPANSION MODULE

LINK COMMUNICATIONS, INC.
1407 4TH AVE. NORTH, BILLINGS, MT 59101
PHONE: (406) 245-5002 FAX: (406) 245-4889

DRAWING	DATE	REVISION	SHEET
RLC-1 MODULE	Tuesday, July 28, 1998	A	2

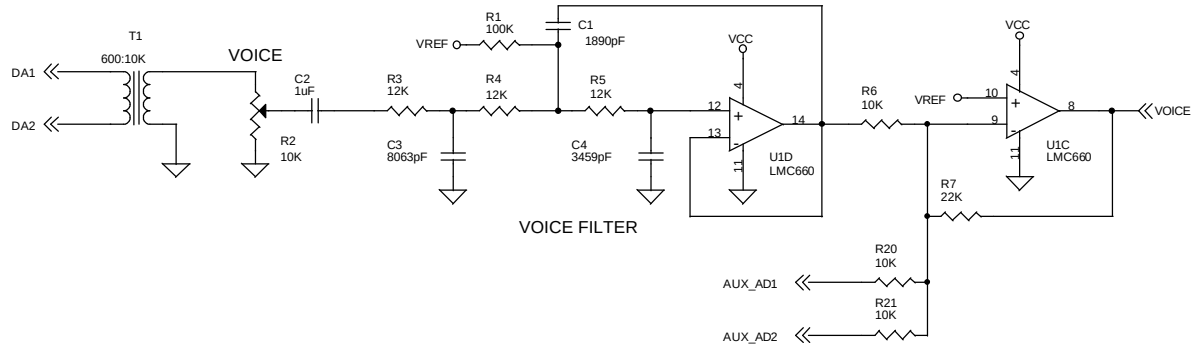

VOICE FILTER

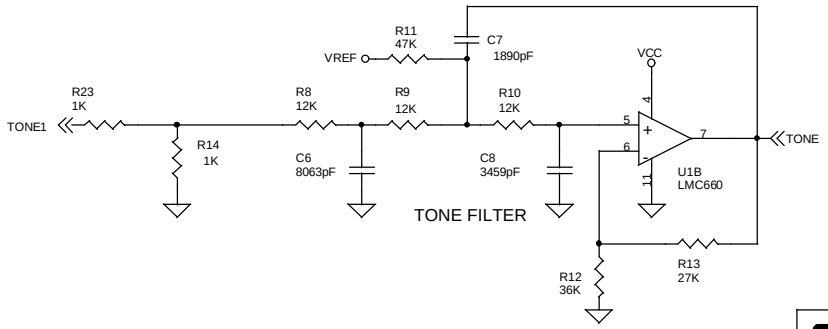

TONE FILTER

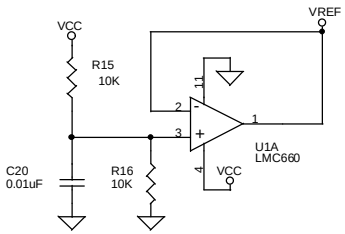

LINK COMMUNICATIONS, INC.
1407 4TH AVE. NORTH, BILLINGS, MT 59101
PHONE: (406) 245-5002 FAX: (406) 245-4889

DRAWING	DATE	REVISION	SHEET
Audio Processing	Tuesday, July 28, 1998	A	1

Bill of Materials

Bill of Materials: RLC-1 Revision E

Item .	Quantity	Reference
22pF	2	C20, C21
33pF	2	C18, C19
0.01uF	16	C1, C2, C3, C5, C6, C7, C26, C27, C28, C29, C31, C32, C33, C35,C15,C16
0.1uF	6	C4, C8, C9, C11, C17, C30
0.2uF	2	C10, C12
1uF	6	C23, C25, C34, C36, C37, C38
4.7uF	2	C13, C14
10uF	2	C22, C24
237	1	R48
470	1	R7
680	3	R24, R30, R42
1K	12	R14, R18, R20, R26, R35, R36, R37, R38, R44, R45, R46, R47
1.69K	1	R49
2.5K	4	R50, R51, R52, R53
5.1K	6	R12, R13, R16, R17, R33, R34
10K	3	R23, R31, R61
10K, 16 pin Dip	1	R2
15K	1	R60
22K	1	R1
47K	4	R21, R22, R27, R28

Item .	Quantity	Reference
47K	2	R39, R43
50K	2	R4, R9
100K	2	R3, R5
200K	4	R11, R15, R19, R25
300K	1	R6
10M	2	R40, R41
1N4004	1	D19
1N5256	7	D8, D9, D10, D11, D12, D13, D14
1N750A	8	D3, D4, D5, D6, D15, D16, D17, D18
2N7000	8	Q1, Q2, Q3, Q4, Q5, Q6, Q7, Q9
8MHZ .	1	Y1
3.58MHZ .	1	Y2
CD14053	1	U10
CD14066	1	U2
Teletone M-8870	1	U8
LM317 .	1	RG2
LM7805 .	1	RG1
LMC660	2	U1, U3
MC68HC711E9	1	U7
74C906 .	1	U9
DS1232 .	1	U6

Item .	Quantity	Reference
DS1275 .	1	U4
or...		
Max 232	1	U4
2.5mm Power Connector	1	J3
DB9 RA/F	3	P1, P3, P4
DB25 RA/F	1	P5
Male Header, 4x2	1	J10
Male Header, 4x1	2	J11, J12
Male Header, 1x2	4	J6, J7, J8, J9
Male Header, 2x2	2	(J1, J4) , (J2, J5)
Push Button Switch	2	S1, S2
Red Led .	2	D1, D20
PC Board .	1	PCB1
Manual .	1	RLC-1 Manual

RLC-1a Plus Module

Item .	Quantity	Reference
33pF	4	C18, C19, C21, C22
1890pF	2	C1, C7
3459pF	2	C4, C8
8063pF	2	C3, C6
0.01uF	7	C12, C13, C14, C15, C16, C17, C20

Item .	Quantity	Reference
0.1uF	1	C11
1uF	1	C2
4.7uF	1	C23
1K	3	R14, R19, R23
10K	5	R6, R15, R16, R20, R21
10K	1	R2
12K	6	R3, R4, R5, R8, R9, R10
22K	1	R7
36K	2	R12, R13
100K	2	R1, R11
1M	1	R17
1MEG	1	R22
3.2768MHz	1	Y1
16MHz	1	Y2
27C020	1	U4
2N3904	1	Q1
74HC4066	1	U8
DS1643-15	1	U6
74HC138	1	U9
74HC574	1	U7
LMC660	1	U1
MC68HC11K1CFN4	1	U3

Item .	Quantity	Reference
TSP53C30	1	U5
600:10K Xformer	1	T1
68HC11E1 SOCKET	1	U2
Audio Access Jumpers	2	J2, J3
IDC 20	1	J1